2014.12.10.

MAN-xxxx

Pressure gauges

Kobold Unirota Kft.

Table of contents

M-Zert
Zertifiziertes QM-System
DIN EN ISO 9001
Zertifikat-Nr. 01017

Differential Pressure Gauges with Bourdon Tube

for Industrial Applications

KOBOLD

measuring • monitoring • analysing

MAN-DF

- Housing:: 100 mm, 160 mm
- Connection: 2 x G½ male
- Material
  Housing: steel black,
  aluminium, stainless steel
  Connection: brass, stainless steel
- Indicating range:
  0 ... +0.6 bar ... 0 ... +400 bar
- Differential pressure range:
  0.1 ... +0.3 bar ... 0 ... +300 bar
- Options:
  Damping liquid, contacts

P1

KOBOLD companies worldwide:
ARGENTINA, AUSTRIA, BELGIUM, BULGARIA, CANADA, CHILE, CHINA, COLOMBIA, CZECHIA, DOMINICAN REPUBLIC, EGYPT, FRANCE, GERMANY, GREAT BRITAIN, HUNGARY, INDIA, INDONESIA, ITALY, MALAYSIA, MEXICO, NETHERLANDS, PERU, POLAND, ROMANIA, SINGAPORE, SOUTH KOREA, SPAIN, SWITZERLAND, TAIWAN, THAILAND, TUNISIA, TURKEY, USA, VIETNAM

KOBOLD Messring GmbH
Nordring 22-24
D-65719 Hofheim/Ts.
Head Office:
+49(0)6192 299-0
+49(0)6192 23398
info.de@kobold.com
www.kobold.com

Application

These KOBOLD pressure gauges are suitable for measuring of liquid and gaseous medias, altough this should not be viscous or susceptible to crystallization. These are used wherever the primary pressure, the after-pressure and the resulting pressure differential are to be displayed at the same time. A cheaper available alternative to the differential pressure gauge that uses a diaphragm is the model with direct display of the differential pressure.

Measuring principle

Mechanical pressure measurement uses the principle of an elastic measuring element, which generates a precisely defined, reproducible deflection when subjected to pressure.

2 variations are available:

Reading 2 single pressures and the differential pressure

Both pointers turn around the same axle and indicate the values separately. The pointer on the low-pressure side has the form of a dial. On this dial the pressure difference between the low and high pressure side is given which may not exceed 50 % of the full measuring range. Each single value can be read off directly.

Reading just the differential pressure (MAN-DG12R..)

Two linked Bourdon tube systems are mounted in the housing in parallel, and when the pressure rises they both move in the same direction. The pointer only moves when the distension of the two diaphragms is different and it then indicates the differential pressure on the scale direct.

Unifilar drawing

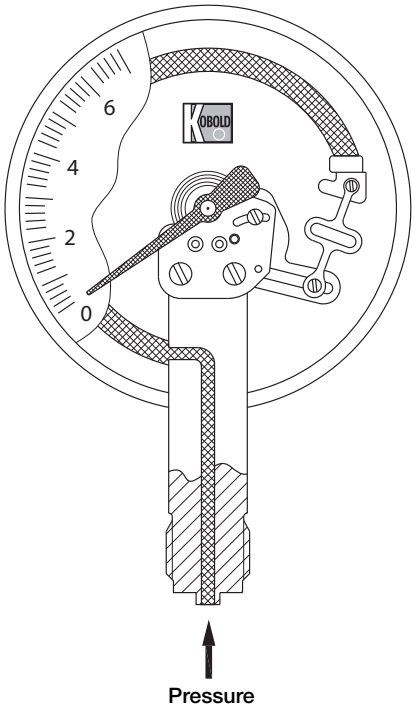

Housing

The following housing diameters are available: 100 mm and 160 mm. The housing materials are available in steel, black painted, aluminium or stainless steel.

Installation

The gauges are usually built straight into the threaded socket in the customer's system.

Connection

Gauges are supplied with a G½ male connecting thread as standard. The connector is made of brass or 1.4571 stainless steel. For viscous, crystallising, aggressive materials or higher temperature materials to prevent the material being measured from penetrating into the measuring system. Other connection types are available on request.

Measuring ranges

Gauges that show the two different pressures are graduated according to DIN recommendations and lie between 0 ... 0.6 bar and 0...400 bar. Up to 50 % of the respective measuring ranges can be read as differential pressure giving differential pressure ranges of 0.1 ... 0.3 bar to 100 ... 300 bar. Gauges with differential pressure display (MAN-DR12R..) are available for measuring ranges from 0 ... 1 bar to 0 ... 60 bar.

Damping liquid

Pressure gauges with liquid filling are used in locations with high alternating dynamic loads, strong vibrations and pulses. The filling ensures easy readability through steady pointer movement even when subjected to extreme loading and heavy vibration. The lubricating effect of the glycerine also keeps wear to a minimum. Glycerine is always used as a matter of principle. In gauges with a contact or an electrical measuring transducer, liquid paraffin is used as a non-conductive alternative.

Silicon fillings of various viscosities are also optionally available.

Contacts

For monitoring the system pressure, gauges with a direct differential pressure display (MAN-DG 12R) can be fitted with up to 3 limit contacts. Slow action, magnetic spring, inductive and pneumatic contacts are also available.

Fields of application:

- Industrial heaters
- Filter monitoring
- Water-recycling plant
- Brake test benches

1/02-2014

Differential Pressure Gauges with Bourdon Tube for Industrial Applications Model MAN-DF

Technical Details

Differential pressure gauges		Individual pressures (calculate difference)					Differential pressure indication
Connection/housing		**NG 100**			**NG 160**		**NG 160**
Bottom connection 	**MAN-...**	**...DF12...**	**...DF52...**	**...DF16...**	**...DG12...**	**...DG26...**	**...DG12R...**
Accuracy class		1.6					1.6
Diameter		100 mm			160 mm		160 mm
Housing version		steel, black		st. steel 1.4301	steel, black	st. steel 1.4301	Alu, back flange
Filling		-	glycerine	-	-	-	-
Ring		brass		st. steel 1.4301	steel, black	st. steel 1.4301	steel, black
Pointer		aluminium, black anodized					
Movement		brass		st. steel 1.4301	brass	st. steel 1.4301	brass
Throttle		Ms. Ø 0,4 / Ø 0,8 (optional)					from 60 bar, Ø 0,5
Window		instrument glass		safety glass	instrument glass	safety glass	instrument glass
Measuring element		CuZn		st. steel 1.4301	CuZn	st. steel 1.4301	CuZn
Protection		IP 33	IP 67	IP 33	IP 33	IP 33	IP 54
Overrange protection		short time 1.3 times of full scale					
Weight		1.0 kg	1.3 kg	1.0 kg	1.6 kg	1.6 kg	2.6 kg
Ambient temperature		-20 ... +60 °C		-20 ... +100 °C	-20 ... +60 °C	-20 ... +100 °C	-20 ... +60 °C
Connection		brass		st. steel 1.4571	brass	st. steel 1.4571	brass
Thread connection		G ½ male					
Max. temperature of medium		+60 °C		+100 °C	+60 °C	+100 °C	+60 °C
Contacts		none					max. 3
Differential pressure	**Indicating range***	**Code of indicating range**					
0.1 ... 0.3 bar	0...0.6 bar	..B1	..B1	..B1	..B1	..B1	-
0.2 ... 0.5 bar	0...1 bar	..B2	..B2	..B2	..B2	..B2	-
0.3 ... 0.8 bar	0...1.6 bar	..B3	..B3	..B3	..B3	..B3	-
0.5 ... 1.25 bar	0...2.5 bar	..B4	..B4	..B4	..B4	..B4	-
0.7 ... 2 bar	0...4 bar	..B5	..B5	..B5	..B5	..B5	-
1 ... 3 bar	0...6 bar	..B6	..B6	..B6	..B6	..B6	-
2 ... 5 bar	0...10 bar	..B7	..B7	..B7	..B7	..B7	-
3 ... 5 bar	0... 16 bar	..B8	..B8	..B8	..B8	..B8	-
5 ... 12.5 bar	0... 25 bar	..B9	..B9	..B9	..B9	..B9	-
7 ... 20 bar	0... 40 bar	..B0	..B0	..B0	..B0	..B0	-
10 ... 30 bar	0... 60 bar	..C1	..C1	..C1	..C1	..C1	-
20 ... 30 bar	0... 100 bar	..C2	..C2	..C2	..C2	..C2	-
30 ... 80 bar	0... 160 bar	..C3	..C3	..C3	..C3	..C3	-
50 ... 125 bar	0... 250 bar	..C4	..C4	..C4	..C4	..C4	-
70 ... 200 bar	0...400 bar	..C5	..C5	..C5	..C5	..C5	-
	0... 1 bar	-	-	-	-	-	..B2
	0... 1.6 bar	-	-	-	-	-	..B3
	0... 2.5 bar	-	-	-	-	-	..B4
	0... 4 bar	-	-	-	-	-	..B5
	0... 6 bar	-	-	-	-	-	..B6
	0... 10 bar	-	-	-	-	-	..B7
	0... 16 bar	-	-	-	-	-	..B8
	0... 25 bar	-	-	-	-	-	..B9
	0... 40 bar	-	-	-	-	-	..B0
	0... 60 bar	-	-	-	-	-	..C1

* Negative or positive, or negative and positive overpressure.
The required display range is to be selected depending on the maximum total overpressure that occurs!

MAN-DF12, MAN-DF52, MAN-DF16, MAN-DG12, MAN-DG26

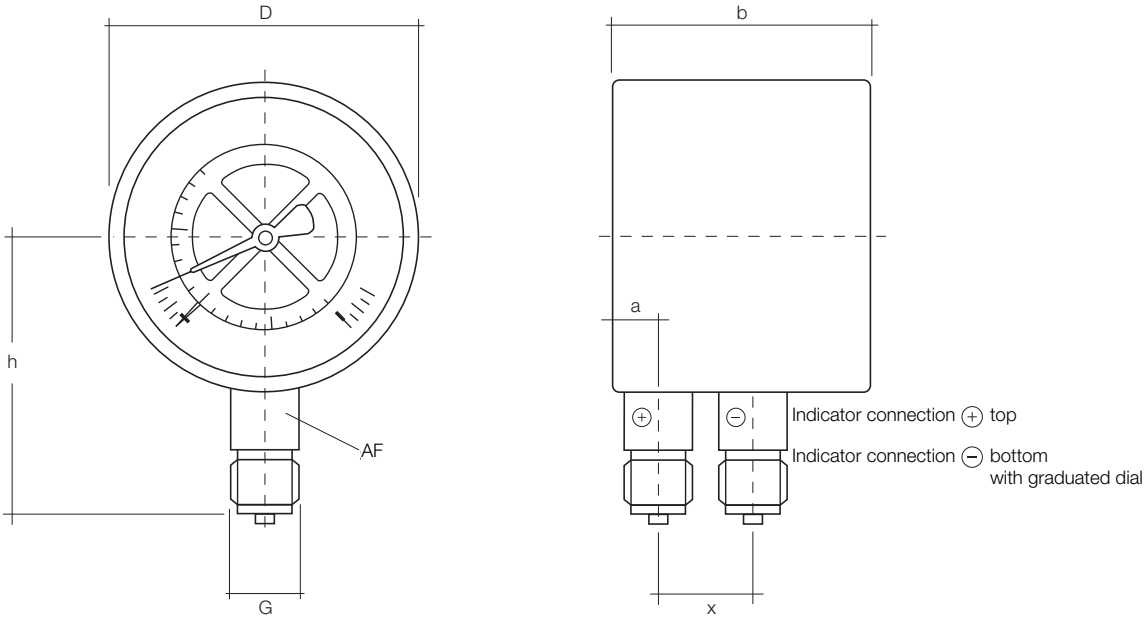

Dimensions

Design	NG	Dimensions [mm]						
		a ± 0.5	b ± 0.5	x ± 0.5	D ± 0.5	G	h ± 1	AF
DF12.., DF16..; DF52..	100	15.5	82	32	100	G½ A	87	22
DG12.., DG16..	160	15.5	86,5	32	160	G½ A	118	22

MAN-DG12R

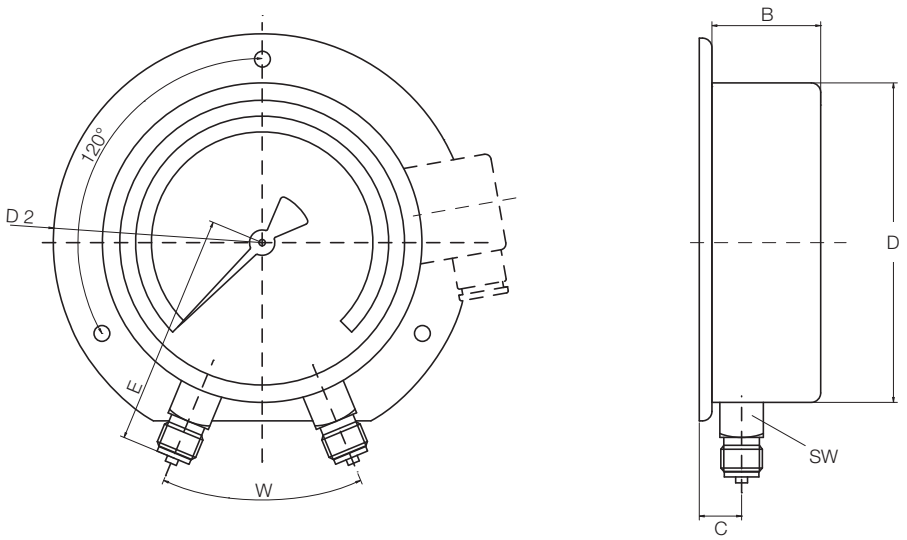

Dimensions

Model	NG	Dimensions [mm]								
		B	B up to 3 contacts	C	D	D2	E	W	SW	X
MAN-DG12R...	160	58	120	22	160	196	115	45°	22	118

1/02-2014

M-Zert
Zertifiziertes QM-System
DIN EN ISO 9001
Zertifikat-Nr. 01017

Diaphragm Differential Pressure Gauges

for Industrial Applications

KOBOLD

measuring • monitoring • analysing

MAN-D

- Housing: 100 mm, 160 mm
- Connection:
  2 x G¼ female, 2 x G½ female,
  cutting ring 6 mm
- Material
  Housing: stainless steel, aluminium
  Connection: stainless steel
- Indicating range:
  0 ... +16 mbar ... 0 ... +40 bar
- p_{max}: 400 bar

P1

KOBOLD companies worldwide:

ARGENTINA, AUSTRIA, BELGIUM, BULGARIA, CANADA, CHILE, CHINA, COLOMBIA, CZECHIA, DOMINICAN REPUBLIC, EGYPT, FRANCE, GERMANY, GREAT BRITAIN, HUNGARY, INDIA, INDONESIA, ITALY, MALAYSIA, MEXICO, NETHERLANDS, PERU, POLAND, ROMANIA, SINGAPORE, SOUTH KOREA, SPAIN, SWITZERLAND, TAIWAN, THAILAND, TUNISIA, TURKEY, USA, VIETNAM

KOBOLD Messring GmbH
Nordring 22-24
D-65719 Hofheim/Ts.
Head Office:
+49(0)6192 299-0
+49(0)6192 23398
info.de@kobold.com
www.kobold.com

Application

Differential pressure gauges with diaphragms are suitable for liquid or gaseous media, that are neither crystallise nor highly viscous. Due to the materials available these pressure gauges can also be used for chemically aggressive media. Fully stainless steel pressure gauges are ideally suited for use with chemically aggressive ambient conditions. These are used wherever the differential pressure resulting between intake and delivery pressures are to be displayed.

Measuring principle

The process medium chambers (+) and (-) are sparated by a diapgragm. The difference in pressure between the (+) and (-) i-medium chambers deflects the diaphragm. This deflection (travel) is transmitted to the pointer via a posh rod causing a pointer deflection in proportion to the difference in pressure. Metal bellows seal the two pressure chambers away from the gauge case. Metal supporting elements guarantee overload protection.

In contrast to this the differential pressure gauges MAN-DF2G or MAN-DG2G work with two »hydraulically« coupled diaphragm elements, between the pressure transmitting fluid is enclosed. If both diaphragm elements are subjected to different pressures this is transmitted to the movement which causes a deflection of the pointer proportional to the differential pressure.

Unifilar drawing

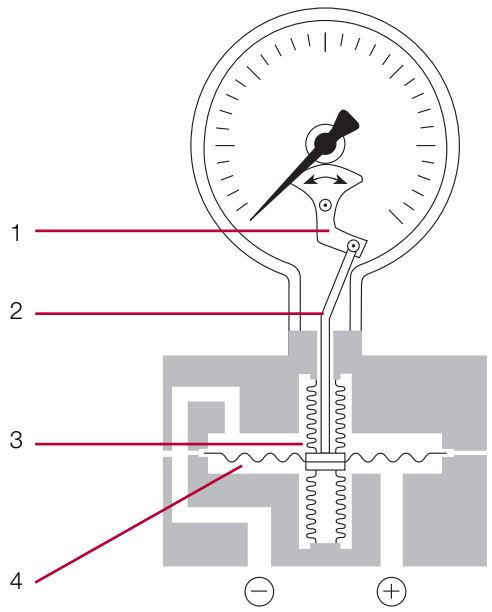

1. Measuring membrane
2. Metal bellows
3. Connecting rod
4. Indicator works

Housing

The following housing diameters are available: 100 mm and 160 mm. The housing materials are available in stainless steel or aluminium.

Installation

The pressure gauges are usually built directly into the customer's existing pipe system or into a valve block.

Connection

The gauges are supplied with G¼ female, G½ female or with a 6 mm cutting ring connection as standard. The connection is made of stainless steel. Diaphragm seals can be mounted for viscous, crystallising, aggressive materials or higher temperature materials to prevent the material being measured from penetrating into the measuring system.

Measuring ranges

The differential pressure display is graduated according to DIN recommendations and lie between 0...16 mbar and 0...40 bar.

Damping liquid

Pressure gauges with liquid filling are used in locations with high alternating dynamic loads, strong vibrations and pulses. The filling ensures easy readability through steady pointer movement even when subjected to extreme loading and heavy vibration. The lubricating effect of the glycerine also keeps wear to a minimum. Glycerine is always used as a matter of principle. In gauges with a contact or an electrical measuring transducer, liquid paraffin is used as a non-conductive alternative. Silicon fillings of various viscosities are also optionally available.

Contacts

For monitoring the system pressure and controlling process flows can be fitted up to three limit contacts. Gauges can be supplied with magnetic spring or inductive contacts (for the MAN-DG3Y also slow action or pneumatic contacts) (see chapter »Contact Installations«).

Analogue output

Versions with an analogue output are available for transmitting the reading onto an indicating device or a control unit.

Fields of application:

- Industrial heaters
- Filter monitoring
- Water-recycling plant
- Brake test benches

1/02-2014

Technical Details

Diaphragm Differential Pressure Gauges					
Model/Code MAN-...	**...DF25...**	**...DG25...**	**...DF75...**	**...DG75...**	**...DG3Y...**
					
Accuracy class	1.6				1.6
Diameter	100 mm	160 mm	100 mm	160 mm	160 mm
Housing version	stainless steel		stainless steel filled		aluminium
Ring	stainless steel		stainless steel		steel black
Pointer	Aluminium				aluminium
Movement	stainless steel				brass
Throttle	none				none
Window	safety glass				instrument glass
Measuring element	stainless steel				stainless steel
Sealing	without				
Protection	IP 54		IP 67		IP 54
Overrange protection	see following table				
Weight	see dimensions				
Ambient temperature	-20 ... +60°C				
Connection	stainless steel				
Thread connection	G ¼ female				6 mm cutting ring
Max. temperature of medium	100 °C		80 °C		
Contacts	max. 2 contacts				max. 3 contacts
Indicating range	**Code of indicating range**				
0...16 mbar	F8*	F8*	F8*	F8*	-
0...25 mbar	F9	F9	F9	F9	-
0...40 mbar	F0	F0	F0	F0	-
0...60 mbar	F1	F1	F1	F1	-
0...100 mbar	F2	F2	F2	F2	F2
0...160 mbar	F3	F3	F3	F3	F3
0...250 mbar	F4	F4	F4	F4	F4
0... 0.4 bar	BA	BA	BA	BA	BA
0... 0.6 bar	B1	B1	B1	B1	B1
0... 1 bar	B2	B2	B2	B2	B2
0... 1.6 bar	B3	B3	B3	B3	B3
0... 2.5 bar	B4	B4	B4	B4	B4
0... 4 bar	B5	B5	B5	B5	B5
0... 6 bar	B6	B6	B6	B6	B6
0...10 bar	B7	B7	B7	B7	B7
0... 16 bar	B8	B8	B8	B8	B8
0... 25 bar	B9	B9	B9	B9	B9

* only for accuracy class 2.5

Continuation next page

Diaphragm Differential Pressure Gauges for Industrial Applications Model MAN-D

Diaphragm Differential Pressure Gauges: Option output for all indication ranges					
Model/code MAN-...	**...DF25...**	**...DG25...**	**...DF75...**	**...DG75...**	**...DG3Y...**
					
Contacts See Chapter »Contact Installations«					
or **Analogue output**	**Code**				
Current output 4-20 mA	A4	-	A4	-	on request
other options					
3-spindle press. compensation & shut-off valve, Ms	-	-	-	-	-
3-spindle press. compensation & shut-off valve, VA	-	-			-
Sealing FPM instead of NBR	-	-	-	-	-
Housing with filling	-	-	-	-	without*
Safety according to DIN 16006	without*	without*	without*	without*	-
Oil- and grease free for oxygen	without*	without*	without*	without*	on request
Bracket for wall mounting	without*	without*	without*	without*	without*
Bracket for pipe mounting	without*	without*	without*	without*	on request
spindle valve block G ½ male	without*	without*	without*	without*	-
3-spindle valve block G ½ male	without*	without*	without*	without*	-
Pressure room ventilation	without*	without*	without*	without*	on request
Connection right	without*	without*	without*	without*	-

* Please specify in writing!

	MAN-DF25... MAN-DG25... MAN-DF75... MAN-DG75...		**MAN-DG3Y...**	
Indicating range	**Max.**	**Overload**	**Max.**	**Overload**
0...16 mbar	2.5 bar	2.5 bar	-	-
0...25 mbar	2.5 bar	2.5 bar	-	-
0...40 mbar	2.5 bar	2.5 bar	-	-
0...60 mbar	6 bar	2.5 bar	-	-
0...100 mbar	6 bar	2.5 bar	2.5 bar	2.5 bar
0...160 mbar	6 bar	2.5 bar	2.5 bar	2.5 bar
0...250 mbar	6 bar	2.5 bar	2.5 bar	2.5 bar
0... 0.4 bar	25 bar	4 bar	4 bar	4 bar
0... 0.6 bar	25 bar	6 bar	6 bar	6 bar
0... 1 bar	25 bar	10 bar	10 bar	10 bar
0... 1.6 bar	25 bar	16 bar	16 bar	16 bar
0... 2.5 bar	25 bar	25 bar	25 bar	25 bar
0... 4 bar	25 bar	25 bar	25 bar	25 bar
0... 6 bar	25 bar	25 bar	25 bar	25 bar
0...10 bar	25 bar	25 bar	25 bar	25 bar
0... 16 bar	25 bar	25 bar	25 bar	25 bar
0... 25 bar	25 bar	25 bar	25 bar	25 bar

1/02-2014

Diaphragm Differential Pressure Gauges PN 40/100/250/400		
Model/Code MAN-...	**...DF2G...**	**...DG2G...**
		
Accuracy class	1.6	
Diameter	100 mm	160 mm
Housing version	stainless steel	
Ring	stainless steel	
Pointer	aluminium	
Movement	stainless steel	
Throttle	none	
Window	safety glass	
Measuring element	stainless steel	
Sealing	FPM	
Protection	IP 54 (IP 67 with filled housing)	
Overload (rest load)	40 bar (option 400 bar)	
Weight	see dimensions	
Ambient temperature	-20 ... +60°C	
Connection	stainless steel	
Thread connection	G ½ female	
Max. temperature of medium	100 °C	
Indicating range	**Code of indicating range**	
0...60 mbar	F1	F1
0...100 mbar	F2	F2
0...160 mbar	F3	F3
0...250 mbar	F4	F4
0... 0.4 bar	BA	BA
0... 0.6 bar	B1	B1
0... 1 bar	B2	B2
0... 1.6 bar	B3	B3
0... 2.5 bar	B4	B4
0... 4 bar	B5	B5
0... 6 bar	B6	B6
0...10 bar	B7	B7
0... 16 bar	B8	B8
0... 25 bar	B9	B9
0... 40 bar	B0	B0

Option output		
Contacts See Chapter »Contact Installations«		
or **Analogue output**	**Code**	
Current output 4-20 mA	-	A4

other options	**Code**	
Bracket for wall mounting	without*	without*
Bracket for pipe-mounting	without*	without*
Spindle valve block G ½ A	without*	without*
3-spindle valve block G ½ A	without*	without*
Housing with filling	without*	without*
Overpress. sec. 100/250/400 bar instead of 40 bar	without*	without*

* Please specify in writing!

Model: MAN-DF25..., -DG25.., -DF75.., -DG75...

Standard version

Connection 2 x G¼ female thread, bottom

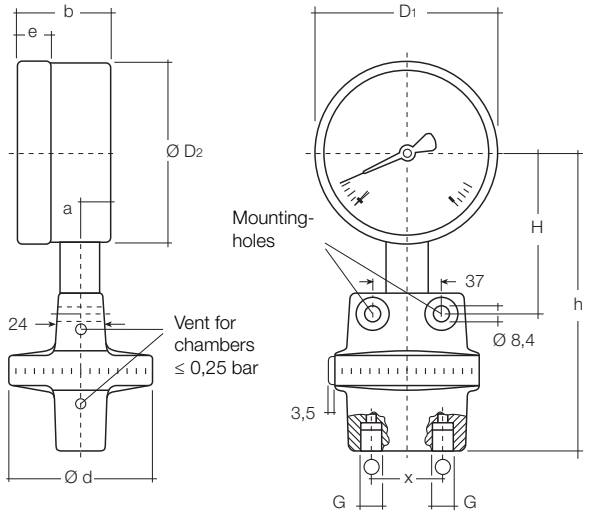

Option

Connection 2 x G¼ female thread, right hand side

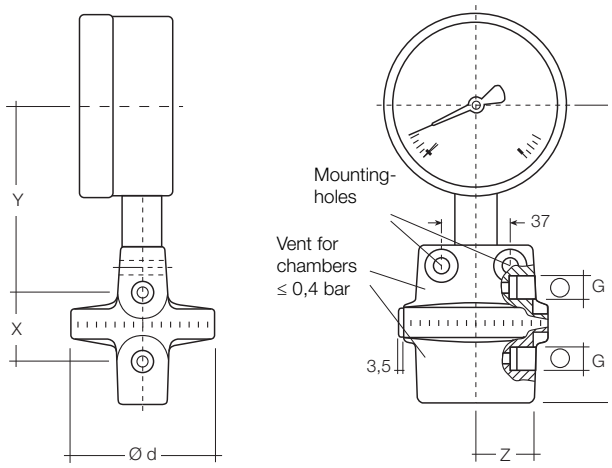

NG	Indication range [bar]	Dimensions [mm]												Weight [kg] *
		a	b	D1	D2	d	e	G	h±1	H	X	Y	Z	
100	≤ 0.25	15.5	49.5	101	99	140	17.5	G¼	171	90	37	104	69	1.5
100	≤ 0.25	15.5	49.5	101	99	78	17.5	G¼	171	87	37	104	32	1.90
100	≤ 0.25	15.5	49.5	161	159	140	17.5	G¼	201	120	37	134	69	2.25
100	≤ 0.25	15.5	49.5	161	159	78	17.5	G¼	201	117	37	134	32	1,40

Connection according to DIN 16288, symbol Z

* Weight for instruments with filling onr request

Version with cutting ring connection

MAN-DG3Y...

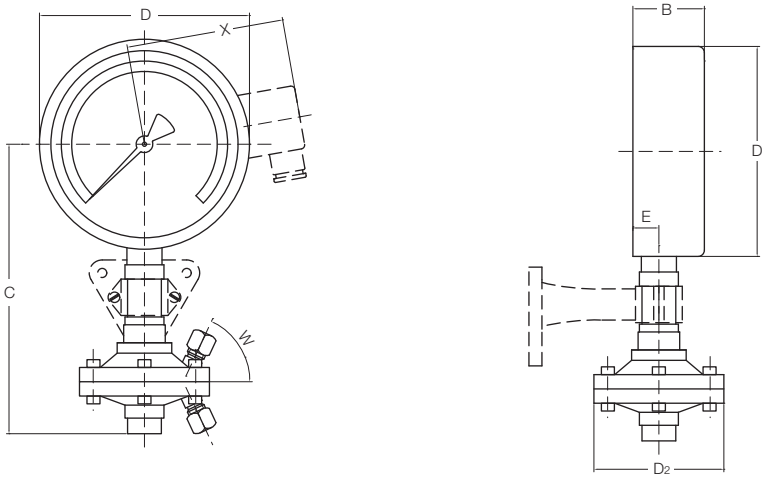

NG	Indication range [mbar]	Dimensions [mm]										Weight [kg] *		
		B without contact	B 1 + 2-x contact	B 3 x contact	C	D	D2	E	SW	W	X	without contact	1 + 2-x contact	3 x contact
160	to 250	54	91	107	220	160	100/140	20	17	65°	118	4.0	4.4	4.5
160	from 400	54	91	107	220	160	100/140	20	17	65°	118	2.7	3.1	3.2

1/02-2014

Model: MAN-DF2G..., -DG2G...

Standard version

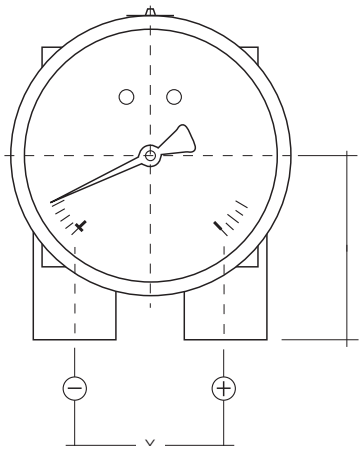

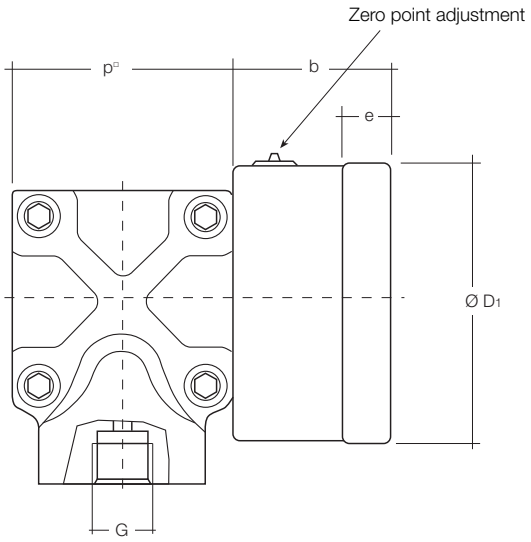

Model	Indicating range [bar]	Dimensions [mm]							Mass [kg]
		b	Ø D1	e	G	h±1	p□	x	
MAN-DF 2G...	≤ 0.25	58.5*	101	17,5*	G½	86	140	54	12.1
	≥ 0.4	58.5*	101	17,5*	G½	64	85	54	3.6
MAN-DG 2G...	≤ 0.25	65.5**	161	17,5*	G½	86	140	54	12.5
	≥ 0.4	65.5**	161	17,5*	G½	64	82	54	4.0

* Series DF 26...M, DF 26...I with one limit signal transmitter: plus 39 mm
** Series DG 26...M, DG 26...I with one limit signal transmitter: plus 36 mm
Series DG 26...A4 with current output: plus 50 mm

Connection acc. to EN837

Option

Bracket for wall or pipe mounting

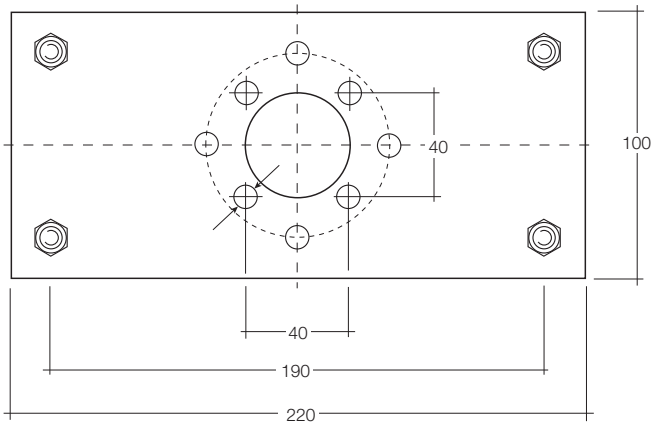

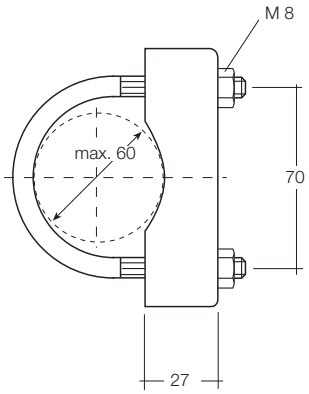

M-Zert
Zertifiziertes QM-System
DIN EN ISO 9001
Zertifikat-Nr. 01017

Bourdon Tube Test Pressure Gauges

according to EN 837-1

KOBOLD

measuring • monitoring • analysing

MAN-F

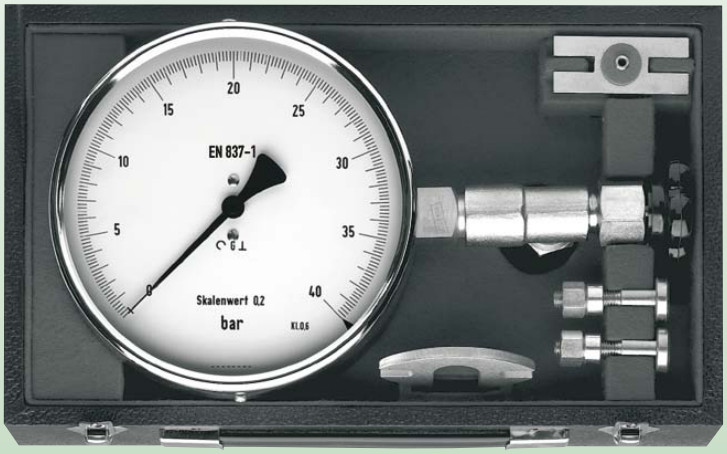

- Housing: 160 mm, 250 mm
- Connection: G½
- Material
  Housing: aluminium,
  steel black, stainless steel
  Connection: brass, stainless steel
- Measuring ranges:
  from 0 ... 0.6 bar ... 0 ... 2500 bar
  and vacuum
- Accuracy class: 0.6 or 0.25
- Options: damping liquid,
  contacts, special ranges

P1

KOBOLD companies worldwide:
ARGENTINA, AUSTRIA, BELGIUM, BULGARIA, CANADA, CHILE, CHINA, COLOMBIA, CZECHIA, DOMINICAN REPUBLIC, EGYPT, FRANCE, GERMANY, GREAT BRITAIN, HUNGARY, INDIA, INDONESIA, ITALY, MALAYSIA, MEXICO, NETHERLANDS, PERU, POLAND, ROMANIA, SINGAPORE, SOUTH KOREA, SPAIN, SWITZERLAND, TAIWAN, THAILAND, TUNISIA, TURKEY, USA, VIETNAM

KOBOLD Messring GmbH
Nordring 22-24
D-65719 Hofheim/Ts.
Head Office:
+49(0)6192 299-0
+49(0)6192 23398
info.de@kobold.com
www.kobold.com

Bourdon Tube Test Pressure Gauges according to EN 837-1 Model MAN-F

Application

These test pressure gauges are manufactured to the very highest standards and are used to test pressures of tanks, pipes fittings and in laboratories.

Measuring principle

The precision test pressure gauges habe a high-grade measuring element. The pressure proprtional elastic deformation of the Bordon tube is transmitted through a low friction movement to the knife edge pointer.

With the help of the scale on the dial you can read the current pressure at measuring element.

Unifilar drawing

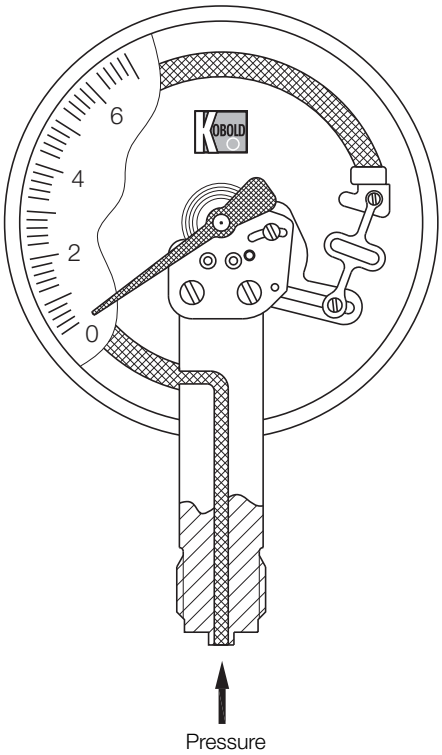

Housing

Following housing diameter are available:

160 mm, 250 mm. The housing material is stainless steel, aluminium or steel, black painted.

Installation

The gauges are most often installed straight into the customer's screw necks. The fine pressure gauge in carrying case is assembled using the accessories supplied (valve etc.).

Connection

The gauges are supplied with a G½ connecting thread as standard. The connection is made of brass or stainless steel. The gauges can be used with non aggressive gaseous or liquid, but not with highly viscous or crystallizing media. Other´connection types are available on request.

Measuring ranges

The measuring ranges are graduated according to DIN recommendations and lie between 0.6 bar and 2500 bar. Other scales with measuring ranges in PSI, Pa or with your company logo are available on request.

Damping liquid

Pressure gauges with liquid filling are used in locations with high alternating dynamic loads, strong vibrations and pulses. The filling ensures easy readability through steady pointer movement even when subjected to extreme loading and heavy vibration. The lubricating effect of the glycerine also keeps wear to a minimum. Glycerine is always used as a matter of principle. In gauges with a contact or an electrical measuring transducer, liquid paraffin is used as a non-conductive alternative.

Silicon fillings of various viscosities are also optionally available. Please note, that not all precision type devices can be filled with liquid.

Contacts

For monitoring the system pressure gauges can be fitted up to 2 limit contacts.

Inductive contacts are also available. (see Chapter Contact Device).

Application areas

- Test benches
- Control and adjustment of operating pressure-measuring gauges
- Laboratories
- Calibration centres, board of weights and measures

Fine pressure gauge in carrying case:

- On site verification of operating pressure measuring gauges

1/04-2014

Bourdon Tube Test Pressure Gauges according to EN 837-1 Model MAN-F

Technical Details

Bourdon tube test pressure gauge						
Connection/housing	**Model**					
Connection bottom  **MAN-..**	**...FG22...**	**...FG32...**	**...FG26...**	**-**	**...FG22Y...**	**...FI12...**
Connection eccentric back  **MAN-..**	**...FG24...**	**...FG34...**	**-**	**-**	**-**	**-**
Connection lateral  **MAN-..**	**-**	**-**	**-**	**...FG1B...**	**-**	**-**
Accuracy class	0.6	0.6	0.6	0.6	0.25	0.6
Diameter	160 mm	160 mm	160 mm	160 mm	160 mm	250 mm
Housing material	stainless steel	aluminium	stainless steel	st. steel	stainless steel	steel black
Housing fillable	yes	yes	yes	no	no	no
Ring	stainless steel	steel black	stainless steel	st. steel	stainless steel	steel black
Pointer	stainless steel 1.4301					
Movement	Messing	Messing	stainless steel	st. steel	stainless steel	stainless steel
Throttle D=	from 60 bar 0.5 mm					
Window	instrument glass	instrument glass	safety glass	safety glass	safety glass	safety glass
Measuring element	CuBe	CuBe	st. steel 1.4571, from 400 bar Monel	stainless steel	CuBe, from 100 bar st. steel 1.4571	CuBe, from 100 bar st. steel 1.4571
Protection	IP 65			IP 54		
Overrange (rest / change / short time)	1.0 times / 0.9 times / 1.3 times of full scale					
Weight (with contacts plus 0.3 kg)	1.0 kg	1.2 kg	1.0 kg	3.8 kg	1.3 kg	3.0 kg
Ambient temperature	-20 ... +60 °C	-20 ... +60 °C	-20 ... +80 °C	-40 ... +60 °C	-40 ... +60 °C	-20 ... +60 °C
Connection	brass	brass	st. steel 1.4571, from 400 bar Monel	st. steel	brass, from 1000 bar st. steel	brass, from 1000 bar st. steel
Thread connection	G ½ male	G ½ male	G ½ male	M20x1,5	G ½ male	G ½ male
Max. temperature of media	80 °C	60 °C	80 °C	200 °C	60 °C	60 °C, from 100 bar: 100 °C
Contacts	max. 2 x	max. 2 x	max. 2 x	no	no	no
Indicating range	**Code of indicating range**					
-0.6 ... 0 bar	-	-	..AC	..AC	..AC	..AC
-1 ... 0 bar	..AD	..AD	..AD	..AD	..AD	..AD
-1 ... +0.6 bar	..A0	..A0	..A0	..A0	..A0	..A0
-1 ... +1.5 bar	..A1	..A1	..A1	..A1	..A1	..A1
-1 ... +3 bar	..A2	..A2	..A2	..A2	..A2	..A2
-1 ... +5 bar	..A3	..A3	..A3	..A3	..A3	..A3
-1 ... +9 bar	..A4	..A4	..A4	..A4	..A4	..A4
-1 ... +15 bar	..A5	..A5	..A5	..A5	..A5	..A5
0 ... 0.6 bar	-	-	-	..B1	..B1	..B1
0 ... 1 bar	..B2	..B2	..B2	..B2	..B2	..B2
0 ... 1.6 bar	..B3	..B3	..B3	..B3	..B3	..B3
0 ... 2.5 bar	..B4	..B4	..B4	..B4	..B4	..B4
0 ... 4 bar	..B5	..B5	..B5	..B5	..B5	..B5
0 ... 6 bar	..B6	..B6	..B6	..B6	..B6	..B6
0 ... 10 bar	..B7	..B7	..B7	..B7	..B7	..B7
0 ... 16 bar	..B8	..B8	..B8	..B8	..B8	..B8
0 ... 25 bar	..B9	..B9	..B9	..B9	..B9	..B9
0 ... 40 bar	..B0	..B0	..B0	..B0	..B0	..B0
0 ... 60 bar	..C1	..C1	..C1	..C1	..C1	..C1
0 ... 100 bar	..C2	..C2	..C2	..C2	..C2	..C2
0 ... 160 bar	..C3	..C3	..C3	..C3	..C3	..C3
0 ... 250 bar	..C4	..C4	..C4	..C4	..C4	..C4
0 ... 400 bar	..C5	..C5	..C5	..C5	..C5	..C5
0 ... 600 bar	..C6	..C6	..C6	..C6	..C6	..C6
0 ... 1000 bar	..D7	..D7	..D7	-	..D7	..D7
0 ... 1600 bar	-	-	..D8	-	..D8	..D8
0 ... 2500 bar	-	-	..D9	-	-	-

Further options on request: back flange, front flange, safety glass instead of instrument glass, double scale, throttle, other threads

Bourdon Tube Test Pressure Gauges according to EN 837-1 Model MAN-F

Dimensions

Bottom connection

Code	NG	A	B without contact	B 1 or 2 contacts	C	d	D	E	AF	W	X
MAN-FG 22/26	160 mm VA	21	50	101	15	159	162	117	22	0	118
MAN-FG 22Y	160 mm VA	17.5	49.5[1]	-	15.5	159	161	118	22	-	-
MAN-FG 32	180 mm Alu	-	48	101	18.5	160	-	115	27	25°	118
MAN-FI 12	250 mm	-	64.5[2]	-	17	250	-	165	22	-	-

[1] 64.5 mm (up to 4 bar and from 1600 bar)
[2] 51.5 mm (for 6 bar up to 60 bar)

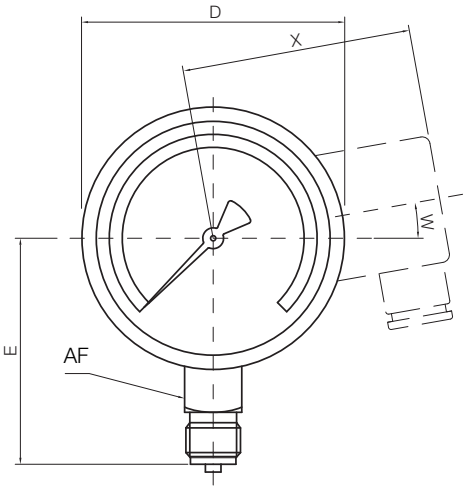

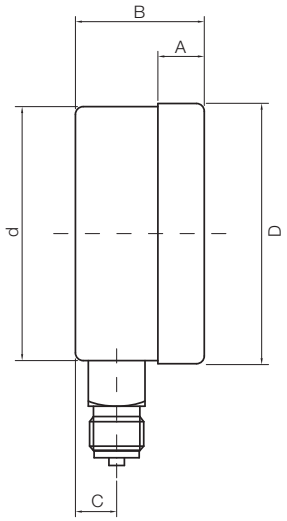

Back connection

Code	NG	A	B without contact	B 1 or 2 contacts	C	d	D	E	AF	W	X
MAN-FG 24	160 mm VA	21	50	101	34	159	162	32.5	17	0	118
MAN-FG 34	160 mm VA	-	48	101	30	160	-	50	27	25°	118

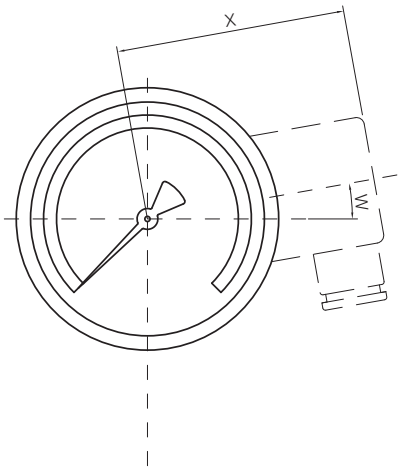

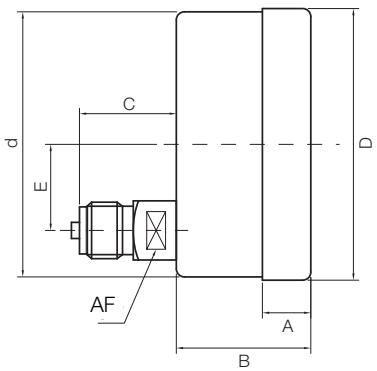

1/04-2014

M-Zert
Zertifiziertes QM-System
DIN EN ISO 9001
Zertifikat-Nr. 01017

Capsule Element Pressure Gauges

according to EN 837-3 · for Low Positive/ Negative Pressures in Gaseous Media

KOBOLD

measuring • monitoring • analysing

MAN-K

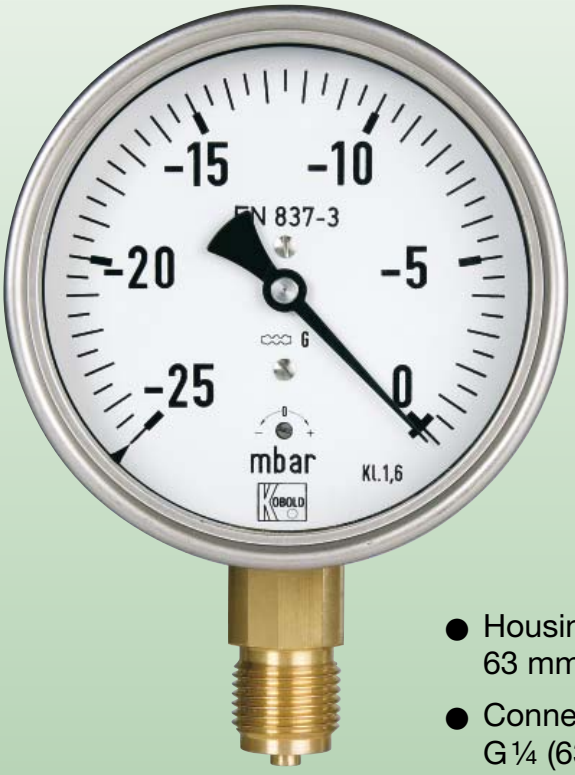

- Housing:
  63 mm, 80 mm, 100 mm, 160 mm
- Connection:
  G¼ (63 mm housing)
  G½ (80, 100, 160 mm housing)
- Material
  Housing: stainless steel
  Connection:
  brass or stainless steel
- Measuring ranges:
  -10 ... 0 mbar ... -600 ... 0 mbar
  0 ... 10 mbar ... 0 ... 600 mbar
- Accuracy class: 1.6

P1

KOBOLD Messring GmbH
Nordring 22-24
D-65719 Hofheim/Ts.
Head Office:
+49(0)6192 299-0
+49(0)6192 23398
info.de@kobold.com
www.kobold.com

Capsule Element Pressure Gauges according to EN 837-3
for Low Positive/Negative Pressures in Gaseous Media Model MAN-K

Application

The KOBOLD pressure gauges with capsule elements are being used to measure low positive/negative pressures in gaseous media. All stainless steel pressure gauges with capsule element are manufactured by using high-quality stainless steel and are therefore suitable for use with corrosive gases.

All the pressure gauges comply with general international guidelines and take account of standard as well as application-specific requirements. They are the result of the over 70 years experience we have in building pressure gauges.

Measuring principle

The capsule system consists of two half capsule elements which are soldered together. The element makes a defined stroke when subjected to pressure. A special measuring mechanism converts this movement into pointer-rotation.

Unifilar drawing

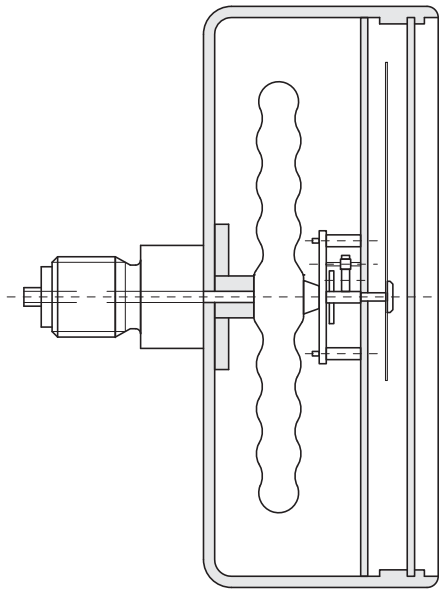

Housing

The following housing diameters are available:

63 mm, 80 mm, 100 mm and 160 mm. The housing material is stainless steel.

Installation

The gauges are most often installed straight into the customer's screw necks. Depending on the required installation the instruments can be supplied with a panel clamp, triangular front ring or mounting flange. Optional gauge models with an installation border on the front are also available for installation into or onto control panels.

Connection

The gauges with 63 and 80 mm housing diameter are supplied with a G¼ connecting thread as standard, gauges with housing diameter of 100 mm and above with G½ connecting thread. The connection is made of brass or stainless steel. Other connection types are available on request.

Measuring ranges

The measuring ranges of the various types are graduated according to DIN recommendations and lie between -10...0 mbar to -600...0 mbar and 0...+10 mbar to 0...+600 mbar. Other scales with measuring ranges in PSI, Pa or with your company logo are available on request.

Damping liquid

Pneumatic capsule gauges cannot be supplied with damping fluid.

Contacts

Pneumatic capsule gauges cannot be supplied with contacts.

Fields of application

- Medical technology
- Filter status measurements
- Leak testing
- Air-conditioning technology
- Exhaust-gas measurements
- Gas production

1/04-2014

Capsule Element Pressure Gauges according to EN 837-3
for Low Positive/Negative Pressures in Gaseous Media Model MAN-K

Technical Details

Standard Capsule element pressure gauges for gases							
Connection/Housing	**NG 63**		**NG 80**	**NG 100**		**NG 160**	
	Model						
Bottom connection  **MAN-...**	**..KD21..**	**..KD21Y..**	**..KE22..**	**..KF22..**	**..KF22Y..**	**..KG22..**	**..KG22Y..**
Back connection  **MAN-...**	**..KD23..** centrical	**..KD23Y..** centrical	**..KE24..** centrical	**..KF24..** centrical	**..KF24Y..** centrical	**..KG24..** centrical	-
Triangular front ring and clamp, Back connection  **MAN-...**	**..KD23K..** centrical	-	**..KE24K..** centrical	**..KF24K..** centrical	-	**..KG24K..** centrical	-
Accuracy class	1,6						
Housing version	stainless steel 1.4301						
Filling	without						
Ring	stainless steel 1.4301						
Pointer	aluminium, black anodized						
Movement	brass						
Throttle	without						
Window	instrument glass						
Measuring element	CuBe2						
Protection	IP 43			IP 54			
Overrrange protection (short time)	1.3 times	10 times	1.3 times	1.3 times	10 times	1.3 times	10 times
Weight	see table						
Ambient temperature	-20 .. +60 °C						
Connection	brass						
Thread connection	G ¼ male		G ½ male				
Max. temperature of medium	80 °C						
Contacts	none						
Indicating range	**Code of indicating range**						
-10 ... 0 mbar	-	-	-	..E5	-	..E5	-
-16 ... 0 mbar	-	-	..E6	..E6	-	..E6	-
-25 ... 0 mbar	-	-	..E7	..E7	-	..E7	-
-40 ... 0 mbar	..E8	..E8	..E8	..E8	..E8	..E8	..E8
-60 ... 0 mbar	..E9	..E9	..E9	..E9	..E9	..E9	..E9
-100 ... 0 mbar	..E0	..E0	..E0	..E0	..E0	..E0	..E0
-160 ... 0 mbar	..E1	..E1	..E1	..E1	..E1	..E1	..E1
-250 ... 0 mbar	..E2	..E2	..E2	..E2	..E2	..E2	..E2
-400 ... 0 mbar	..E3	..E3	..E3	..E3	..E3	..E3	..E3
-600 ... 0 mbar	..E4	..E4	..E4	..E4	..E4	..E4	..E4
0 ... 10 mbar	-	-	..F7	..F7	-	..F7	-
0 ... 16 mbar	-	-	..F8	..F8	-	..F8	-
0 ... 25 mbar	..F9	-	..F9	..F9	-	..F9	-
0 ... 40 mbar	..F0	..F0	..F0	..F0	..F0	..F0	..F0
0 ... 60 mbar	..F1	..F1	..F1	..F1	..F1	..F1	..F1
0 ... 100 mbar	..F2	..F2	..F2	..F2	..F2	..F2	..F2
0 ... 160 mbar	..F3	..F3	..F3	..F3	..F3	..F3	..F3
0 ... 250 mbar	..F4	..F4	..F4	..F4	..F4	..F4	..F4
0 ... 400 mbar	..F5	..F5	..F5	..F5	..F5	..F5	..F5
0 ... 600 mbar	..F6	..F6	..F6	..F6	..F6	..F6	..F6

Capsule Element Pressure Gauges according to EN 837-3
for Low Positive/Negative Pressures in Gaseous Media Model MAN-K

Technical Details

All stainless steel capsule element pressure gauges for industrial applications			
Connection/Housing	**NG 63**	**NG 100**	**NG 160**
	Typ		
Bottom connection  **MAN-...**	**..KD25..**	**..KF26..**	**..KG26..**
Back connection  **MAN-...**	**..KD27..** centrical	**..KF28..** centrical	**..KG28..** centrical
Triangular front ring and clamp, back connection  **MAN-...**	**..KD27K..** centrical	**..KF28K..** centrical	**..KG28K..** centrical
Accuracy class	1,6		
Housing version	stainless steel 1.4301		
Filling	ohne		
Ring	stainless steel 1.4301		
Pointer	aluminium, black anodized		
Movement	stainless steel 1.4571		
Throttle	none		
Window	safety glass		
Measuring element	stainless steel 1.4571		
Protection	IP 43	IP 54	
Overrrange protection (short time)	1.0 times / 0.9 times / 1.3 times of full scale		
Weight	see table		
Ambient temperature	-20 .. +80 °C		
Connection	stainless steel 1.4571		
Thread connection	G ¼ male	G ½ male	
Max. temperature of medium	80 °C		
Contacts	none		
Indicating range	**Code of indicating range**		
-10 ... 0 mbar	-	-	
-16 ... 0 mbar	-	-	
-25 ... 0 mbar	..E7	..E7	..E7
-40 ... 0 mbar	..E8	..E8	..E8
-60 ... 0 mbar	..E9	..E9	..E9
-100 ... 0 mbar	..E0	..E0	..E0
-160 ... 0 mbar	..E1	..E1	..E1
-250 ... 0 mbar	..E2	..E2	..E2
-400 ... 0 mbar	..E3	..E3	..E3
-600 ... 0 mbar	..E4	..E4	..E4
0 ... 10 mbar	-	-	..F7
0 ... 16 mbar	-	-	..F8
0 ... 25 mbar	..F9	..F9	..F9
0 ... 40 mbar	..F0	..F0	..F0
0 ... 60 mbar	..F1	..F1	..F1
0 ... 100 mbar	..F2	..F2	..F2
0 ... 160 mbar	..F3	..F3	..F3
0 ... 250 mbar	..F4	..F4	..F4
0 ... 400 mbar	..F5	..F5	..F5
0 ... 600 mbar	..F6	..F6	..F6

1/04-2014

Capsule Element Pressure Gauges according to EN 837-3
for Low Positive/Negative Pressures in Gaseous Media Model MAN-K

Dimensions

Bottom connection

Code	NG	A	B	C	d	D	E	AF
MAN-KE 21(Y)/25	63 mm	6	31	13	62	68	55	14
MAN-KE 22	80 mm	5	43.5	16	80	84	76	22
MAN-KF 22(Y)/26	100 mm	17	48	15	100	101	86,5	22
MAN-KG 22(Y)/26	160 mm	21	50	15	159	162	117	22

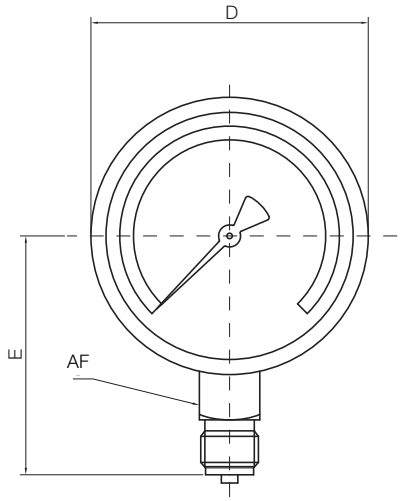

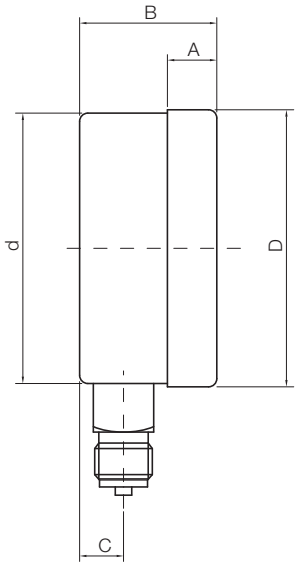

Anschluss hinten

Code	NG	A	B	C	d	D	E	AF
MAN-KD 23(Y)/27	63 mm	6	28	26	63	68	0	14
MAN-KE 24	80 mm	5	43.5	35	80	84	0	22
MAN-KF 24(Y)/28	100 mm	17	49	36	100	101	0	22
MAN-KG 24/28	160 mm	21	50	34	159	162	0	22

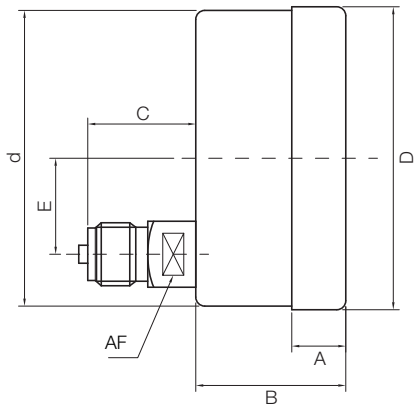

Capsule Element Pressure Gauges according to EN 837-3
for Low Positive/Negative Pressures in Gaseous Media Model MAN-K

Dimensions

Triangular front ring

Code	NG	A	B	C	d	D	E	AF
MAN-KE 23/27K	63 mm	6	26	26	62	68	0	14
MAN-KE 24K	80 mm	5	43.5	35	80	84	0	22
MAN-KF 24/28K	100 mm	5	41	36	101	107	0	22
MAN-KG 24/28K	160 mm	5	45	30	160	162	0	22

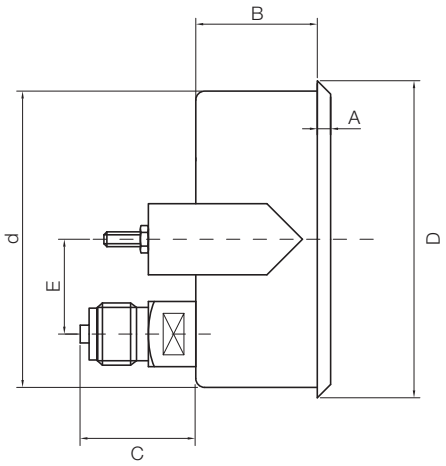

Weight

NG 63	
Code	Weight
MAN-KD 21(Y)	0.13 kg
MAN-KD 23(Y)	0.14 kg
MAN-KD 23K	0.18 kg
MAN-KD 25	0.16 kg
MAN-KD 27	0.15 kg
MAN-KD 27K	0.19 kg

NG 100	
Code	Weight
MAN-KF 22(Y)	0.6 kg
MAN-KF 24(Y)	0.5 kg
MAN-KF 24K	0.6 kg
MAN-KF 26	0.6 kg
MAN-KF 28	0.5 kg
MAN-KF 28K	0.6 kg

NG 80	
Code	Weight
MAN-KE 22	0.4 kg
MAN-KE 24	0.4 kg
MAN-KE 24K	0.4 kg

NG 160	
Code	Weight
MAN-KG 22(Y)	1.0 kg
MAN-KG 24(Y)	1.0 kg
MAN-KG 24K	1.1 kg
MAN-KG 26	1.0 kg
MAN-KG 28	1.0 kg
MAN-KG 28K	1.1 kg

1/04-2014

M-Zert
Zertifiziertes QM-System
DIN EN ISO 9001
Zertifikat-Nr. 01017

All Stainless Steel Bourdon Tube "Solid-front" Pressure Gauges

S3 acc. to EN 837-1 for exceptional safety

KOBOLD

measuring • monitoring • analysing

MAN-N ... S

- Housing: 63 mm, 100 mm, 150 mm
- Connection: G¼, G½, ¼" NPT, ½" NPT
- Material: Stainless steel
- Measuring range: -1 ... 0 bar to 0 ... 1600 bar
- Accuracy class: 1.0 (1.6 with 63 mm)
- Options: Damping liquids, oxygen service and many others

P1

KOBOLD companies worldwide:

ARGENTINA, AUSTRIA, BELGIUM, BULGARIA, CANADA, CHILE, CHINA, COLOMBIA, CZECHIA, DOMINICAN REPUBLIC, EGYPT, FRANCE, GERMANY, GREAT BRITAIN, HUNGARY, INDIA, INDONESIA, ITALY, MALAYSIA, MEXICO, NETHERLANDS, PERU, POLAND, ROMANIA, SINGAPORE, SOUTH KOREA, SPAIN, SWITZERLAND, TAIWAN, THAILAND, TUNISIA, TURKEY, USA, VIETNAM

KOBOLD Messring GmbH
Nordring 22-24
D-65719 Hofheim/Ts.
Head Office:
+49(0)6192 299-0
+49(0)6192 23398
info.de@kobold.com
www.kobold.com

1/05-2013

Description

These Solid-front instruments are built in accordance with safety specifications of EN 837.1 and ASME B40.1.

The safety construction consists of a solid separating wall in stainless steel, placed between the scale and the elastic element and a blow out back which is released from the case whenever an internal pressure, due to leaks, is created or the elastic element is broken. A leak tight fit is ensured if the instrument is filled with a dampening fluid to prevent damage due to vibration. These instruments are designed for use in food, beverage, pharmaceutical, cryogenic, chemical and petrochemical processing industries, and in conventional and nuclear power plants. They are built to resist the most severe operating conditions created by the ambient environment and the process medium.

Technical Data

Dial Size: 63 mm

Standard Model

Design:	EN 837-1
Safety designation:	S3 as per EN 837-2
Ranges:	From 0 ... 15 to 0 ... 15000 psi; from 0 ... 1 to 0 ... 1000 bar (or other equivalent units)
Accuracy class:	1.6 as per EN 837-1
Ambient temperature:	-25 ... + 65 °C(-13 ... +149 °F)
Process fluid temperature:	Max. +100 °C (+212 °F)
Thermal drift:	± 0.4%/10 K of range (starting from 68 °F / 20 °C)
Working pressure:	75% of FSV for static pressure 66% of FSV for pulsating pressure
Over pressure limit (15 min. max.):	25% of FSV for pressure ranges ≤ 1500 psi (100 bar) 15% of FSV for pressure ranges over 1500 psi (100 bar)
Protection degree:	IP 55 as per IEC 529
Socket material:	AISI 316 stainless steel
Bourdon tube:	AISI 316L stainless steel
Case:	Stainless steel
Ring:	Stainless steel, bayonet lock
Blow out disk:	Plastic
Window:	Safety glass
Movement:	Stainless steel
Dial:	Plastic
Pointer:	Adjustable, aluminium, black

Fillable Model

Protection degree:	IP 67 as per IEC 529
Pointer:	Not adjustable, aluminium, black
Other features:	As Standard Model

Filled Model

Damping liquid:	Glycerine 98%, silicon oil or fluorinated fluid
Ambient temperature:	0 ...+65 °C (+59 ...+149 °F) with glycerine filling; -40 ...+65 °C (-40 ...+149 °F) with silicon oil or fluorinated fluid filling
Process fluid temperature:	Max. +65 °C (+149 °F)
Protection degree:	IP 67 as per IEC 529
Pointer:	Not adjustable, aluminium, black
Other features:	As Standard Model

Instruments for Oxygen

Glycerine or silicone should not be used with highly oxidising agents such as oxygen, chlorine, nitric acid or hydrogen peroxide, because of danger of spontaneous chemical reaction, inflammability or explosion. The use of fluorinates fluid is recommended in these cases.

1/05-2013

Dial Size: 100 mm / 150 mm

Standard Model

Design:	EN 837-1
Safety designation:	S3 as per EN 837-2
Ranges:	From 0 ... 0.6 to 0 ... 1600 bar; from 0 ... 15 to 0 ... 30 000 psi (or equivalent units)
Accuracy class:	1 as per EN 837-1
Ambient temperature:	-40 ...+65 °C (-40 ...+149 °F), IP 55 housing (IEC 529); -50 ...+65 °C (-58 ...+149 °F), vented IP 67 housing (IEC 529)
Process fluid temperature:	-40 ...+150 °C
Working pressure (referred to the full scale value):	Max. 90% for pulsating pressure; 100% for static pressure
Over pressure limit:	30% of full scale value
Special over pressure limit:	50% of full scale value, for pressure ranges ≤ 400 bar (max. 1 hour)
Protection:	IP 55 as per IEC 529
Socket material:	AISI 316L stainless steel
Bourdon tube:	AISI 316L stainless steel seamless tube for pressure ranges up to 20 000 psi (0 ... 1000 bar); Duplex stainless steel for range ≥20 000 psi (0 ... 1400 bar)
Case:	AISI 304 stainless steel
Ring:	AISI 304 stainless steel, bayonet lock
Blow out disk:	AISI 304 stainless steel
Window:	Safety glass
Movement:	Stainless steel with internal limit stops for minimum and maximum pressure
Dial:	Aluminium, white with black markings and "▼" symbol at the edges of the scale value
Special dial:	Ranges different from standard, custom artworks available on request
Pointer:	Aluminium, micrometric adjustable

Fillable Model - Vertical type only

Protection:	IP 67 as per IEC 529
Note:	Suitable for glycerine filling; other filling fluids available on request (see Options Table)
Pointer:	Not adjustable, aluminium, black
Other features:	As standard model

Liquid filled Model - Vertical type only

Ambient temperature:	Max. +65 °C, (see Damping Liquids Table for further information)
Process fluid temperature:	+65 °C
Protection:	IP 67 as per IEC 529
Damping liquids:	Glycerine 98%, (see Damping Liquids Table for others filling fluid)
Pointer:	Not adjustable, aluminium, black
Other features:	As Standard Model

Damping Liquids

Damping liquids	Ambient temperatur
Glycerine 98%	0...+65 °C (+59...+150 °F)
Silicone oil / "Fluorolube"	-40...+65 °C (-40...+150 °F)

Instruments for Oxygen

Glycerine or silicone should not be used with highly oxidising agents such as oxygen, chlorine, nitric acid or hydrogen peroxide, because of danger of spontaneous chemical reaction, flammability or exposition. The use of fluorinates fluid is recommended in these cases.

Accessories

Diaphragm seal: A complete range of diaphragm seals are available with a choice of materials of construction. Specifically for corrosive and difficult process fluids plus hygienic applications.

Adjustable over-load protector: This is useful for installations which may generate high overpressures; the pressure gauges is automatically excluded at the pre-set pressure and cut in again automatically when the operating pressure returns to normal.

Valves: For construction details and for use limits refer to our data-sheet for accesories.

Pigtail and siphons: Recommended with temperatures of 65° C (150° F) or over.

Pressure snubbers: For further details refer to our data sheet for accesories.

Ranges: D = DS 63, F = DS 100, H = DS 150

Pressure

Table 1

Range	bar	kPa	MPa	bar ext.	bar ext.	bar ext.
				psi int.	kPa int.	MPa int.
0...0.6[1]	FH			FH	FH	
0...1	DFH		DFH	FH	FH	
0...1.6	DFH		DFH	FH	FH	
0...2.5	DFH		DFH	FH	FH	
0...4	DFH		DFH	FH	FH	
0...6	DFH		DFH	FH	FH	
0...10	DFH		DFH	FH		FH
0...16	DFH		DFH	FH		FH
0...25	DFH		DFH	FH		FH
0...40	DFH		DFH	FH		FH
0...60[1]	DFH	FH	DFH	FH		FH
0...100	DFH	DFH	DFH	FH		FH
0...160	DFH	DFH	DFH	FH		FH
0...250	DFH	DFH		FH		FH
0...400	DFH	DFH		FH		FH
0...600	DFH	DFH		FH		FH
0...1000	DFH	DFH		FH		FH
0...1600	FH	DFH		FH		FH
0...2500		DFH				

[1] not available for filled version

Table 2

Range	psi	psi int.	psi ext.	psi ext.
		kPa ext.	bar int.	kg/cm² int.
0...15	DFH	FH	FH	FH
0...30	DFH	FH	FH	FH
0...60	DFH	FH	FH	FH
0...100	DFH	FH	FH	FH
0...160	DFH	FH	FH	FH
0...200	DFH	FH	FH	FH
0...300	DFH	FH	FH	FH
0...400	DFH	FH	FH	FH
0...600	DFH	FH	FH	FH
0...1000	DFH	FH	FH	FH
0...1500	DFH	FH	FH	FH
0...2000	DFH	FH	FH	FH
0...3000	DFH	FH	FH	FH
0...4000	DFH	FH	FH	FH
0...5000	DFH	FH	FH	FH
0...6000	DFH	FH	FH	FH
0...10000	DFH	FH	FH	FH
0...15000	DFH	FH	FH	FH
0...20000	FH	FH	FH	FH
0...30000[1]	FH	FH	FH	FH

[1] working pressure: Max. 75% of the full scale value
over pressure limit: 10% of the full scale value

Receiver

Table 3

External	Internal	Internal
	0÷100 linear	0÷10 quadratic
0.2...1 bar	FH	FH
0.2...1 kg/cm²	FH	FH
3...15 psi	FH	FH
20...100 kPa	FH	FH

Vacuum and Compound

Table 4

Range	bar	kPa	bar ext.	bar ext.
			psi int.[1]	kPa int.
-1...0	DFH		FH	FH
-1...0.6	DFH		FH	FH
-1...1.5	DFH		FH	FH
-1...3	DFH		FH	FH
-1...5	DFH		FH	FH
-1...9	DFH		FH	FH
-1...15	DFH		FH	FH
-1...24	DFH		FH	FH
-100...0		DFH		
-100...150		DFH		
-100...300		DFH		
-100...500		DFH		
-100...900		DFH		
-100...1500		DFH		
-100...2400		F		

[1] vacuum unit of measurement: "inHg"

Table 5

Range	psi[1]	psi int.[1]	psi ext.[1]	psi ext.[1]
		kPa ext.	bar int.	kg/cm² int.
-30...0	DFH	FH	FH	FH
-30...15	DFH	FH	FH	FH
-30...30	DFH	FH	FH	FH
-30...150	DFH	/	FH	/

[1] vacuum unit of measurement: "inHg"

NH3

Table 6

bar external	NH3 internal	Dial size
-1...5	-70...+9 °C	F
-1...9	-70...+25 °C	F
-1...15	-70...+40 °C	F
-1...24	-70...+56 °C	F

1/05-2013

Order Details (Example **MAN-N F 2 6 S B7 000**)

Model	Dial size (DS)	Version	Process connection	Version	Range (bar)	Options
MAN-N ...	**... D ...** = 63 mm	**... 2 ...** = standard version **... B ...** = fillable version **... 7 ...** = filled version	**5** = G¼ bottom **7** = G¼ back **R** = ¼" NPT bottom **T** = ¼" NPT back **X** = special connection (specify in clear text)	**S** = solid front acc. to EN 837-1 "S3"	**AD** = -1...0 **A0** = -1...0.6 **A1** = -1...1.5 **A2** = -1...3 **A3** = -1...5 **A4** = -1...9 **A5** = -1...15 **A6** = -1...24 **B1** = 0...0.6[1)] **B2** = 0...1 **B3** = 0...1.6 **B4** = 0...2.5 **B5** = 0...4 **B6** = 0...6 **B7** = 0...10 **B8** = 0...16 **B9** = 0...25 **B0** = 0...40 **C1** = 0...60 **C2** = 0...100 **C3** = 0...160 **C4** = 0...250 **C5** = 0...400 **C6** = 0...600 **D7** = 0...1000 **D8** = 0...1600 **XX** = special e.g. dual scale, other units of measure-ment (see range tables and specify in clear text)	**000** = no option **other options:** see options table **YYY** = special option (specify in clear text)
	... F ... = 100 mm **... H ...** = 150 mm		**6** = G½ bottom **8**[2)] = G½ back **S** = ½" NPT bottom **U**[2)] = ½" NPT back **X** = special connection (specify in clear text)			

[1)] not available for dial size 63 mm and for filled version
[2)] only available with standard version code "2"

Note: *Minimum order quantity: 6 pieces per order*

Options: D = DS 63, F = DS 100, H = DS 150

Description	Code	Standard	Fillable	Filled
AISI 316 stainless steel case and ring	C40	FH	FH	FH
"Fluorolube" filling[3]	F30			DFH
Accuracy class: 0.6 as per EN 837-1 (only for ranges ≤ 400 bar (6000 psi))	K06[4]	FH	FH	
Suitable for filling with silicon[3], IP 67	P01		DFH	
Oxygen service (only for ranges ≤ 1000 bar (15 000 psi))	P02	DFH	DFH[2]	DFH[1]
Compensating device, for lower mounting	P03	F	F	F
Silicon filling[3]	S10			DFH
Overpressure 50% of the scale value (max. range 0 ... 400 bar)	SVP	FH	FH	FH
Tropicalisation	T01	FH	FH	FH
AISI 316 stainless steel label	T25	FH	FH	FH
Front flange, for back connection pressure gauges	E00	DFH	D	D
Back flange, for lower connection pressure gauges	C00	FH	FH	FH
Dial tagging	SQ1	FH	FH	FH
Serial number on dial	SQ2	DFH	DFH	DFH

[1] to be ordered only with fluid "Fluorolube" filling (option F30)
[2] to be ordered with option P01
[3] window gasket: Silicone rubber; filling plug and blowout vent: VITON
[4] not available for receivers

1/05-2013

Dimensions (mm) **and Weights** (kg)

DS 63

Lower connection

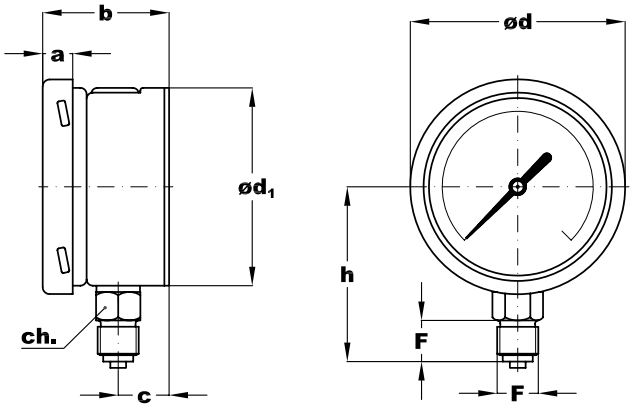

Back connection

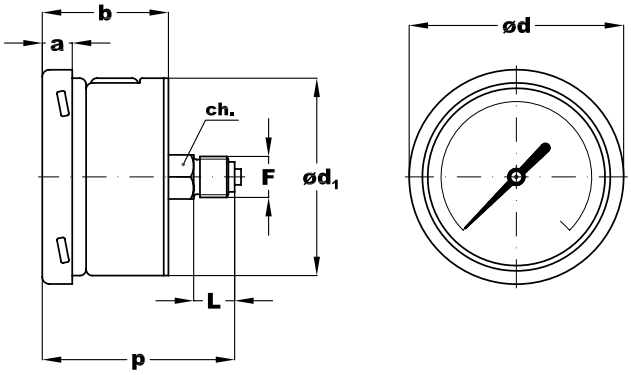

Mounting	F	a	b	c	d	d_1	h	p	L	ch	Weight[1)]
Lower	G2 - G¼A N2 - ¼-18 NPT	10	40	16.7	68	62.6	54.3 - 55.3		13	14 x 8 - 14 x 9	0.2 kg
Back	G2 - G¼A N2 - ¼-18 NPT	10	40		68	62.6		59.1 - 60.1	13	14 x 8 - 14 x 9	0.23 kg

[1)] add 0.1 kg when filled

DS 100, DS 150

Stem mounting; lower connection

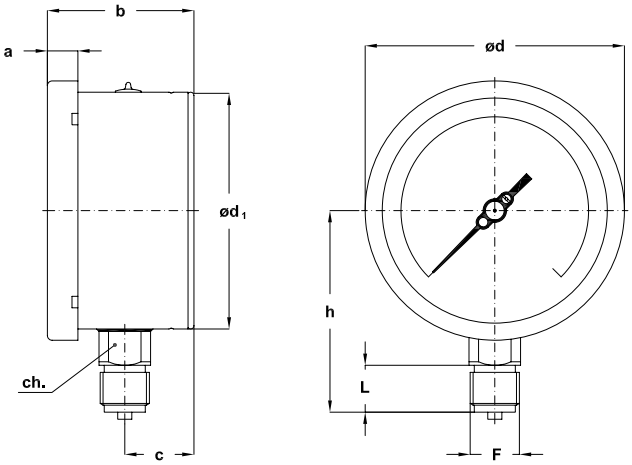

Option C00

Surface mounting, back flange; lower connection

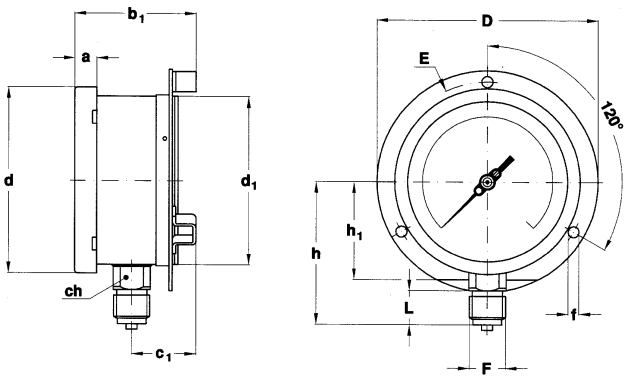

DS	a	b	b_1	c	c_1	d	d_1	h_1	f	D	E	ch	Weight without filling	Weight with filling
100	13	62.5	74	29.5	41	110.6	101	-	6	132	118	22	0.65 kg	0.98 kg
150	15	64	75.5	30	41.5	161	149.6	85	6	190	175	22	1.2 kg	2 kg

DS 100, DS 150

Applicable on standard version only

Stem mounting; back connection

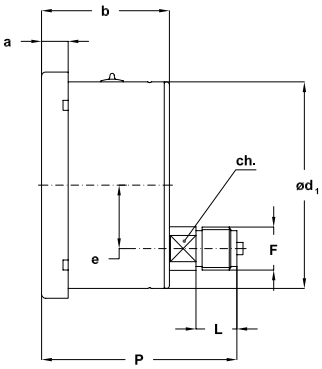

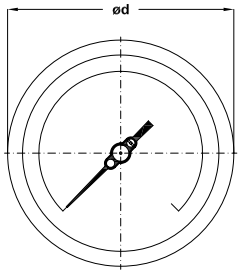

DS 100, DS 150

Option E00 applicable on standard version only

Flush mounting, front flange; back connection

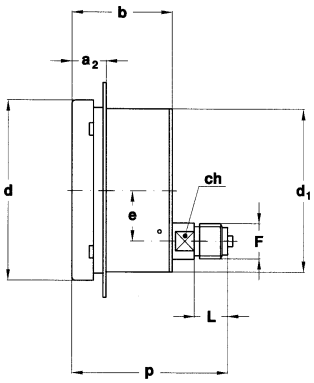

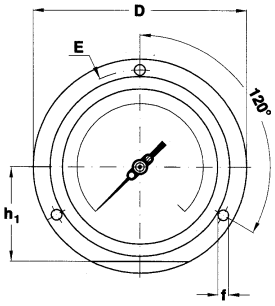

DS	a	a_2	b	d	d_1	e	f	h_1	D	E	ch	Weight without filling
100	13	20	61	110.6	101	31	6	-	132	118	17	0.7 kg
150	15	25.5	64	161	149.6	47.8	6	85	190	175	17	1.15 kg

Process connection

F	Code	DS 100			DS 150		
		L	h	p	L	h	p
¼" BSP M	5	13	79	93.5	13	110	94
¼" NPT	R	15	81	95.5	15	112	96
⅜" BSP M		16	86	95.5	16	117	96
G½ A	6	20	86	95.5	20	117	96
½ - 14 NPT	5	20	86	95.5	20	117	96
M20 x 1.5		20	86	95.5	20	117	96

1/05-2013

M-Zert
Zertifiziertes QM-System
DIN EN ISO 9001
Zertifikat-Nr. 01017

Diaphragm Pressure Gauges

according to EN 837-3
for Stringent Demands

KOBOLD

measuring • monitoring • analysing

MAN-P

- Housing:
  100 mm, 160 mm
- Connection: G ½,
  open measuring flange
  DIN/ANSI
- Material: stainless steel
- Measuring ranges:
  16 mbar ... 40 bar
- Option:
  Filling liquid, Contacts,
  PTFE-coating,
  4 times overpressure,
  overpressure resistant
  compound filled

P1

KOBOLD companies worldwide:
ARGENTINA, AUSTRIA, BELGIUM, BULGARIA, CANADA, CHILE, CHINA, COLOMBIA, CZECHIA, DOMINICAN REPUBLIC, EGYPT, FRANCE, GERMANY, GREAT BRITAIN, HUNGARY, INDIA, INDONESIA, ITALY, MALAYSIA, MEXICO, NETHERLANDS, PERU, POLAND, ROMANIA, SINGAPORE, SOUTH KOREA, SPAIN, SWITZERLAND, TAIWAN, THAILAND, TUNISIA, TURKEY, USA, VIETNAM

KOBOLD Messring GmbH
Nordring 22-24
D-65719 Hofheim/Ts.
Head Office:
+49(0)6192 299-0
+49(0)6192 23398
info.de@kobold.com
www.kobold.com

Application

KOBOLD diaphragm pressure gauges are preferably used for media where Bourdon tube pressure gauges or pneumatic capsule gauges are challenged. Diaphragm pressure gauges have a relatively high actuating force. The annular clamped diaphragm is insensitive to jarring or vibration. An extremely high resistance to overpressure is achieved by underpropping the diaphragm.
With highly viscous, crystallizing or strongly heterogeneous media, open process connections which ensure that the gauges are easy to clean, e. g. by flushing, are used. In processes with chemically aggressive media, diaphragm pressure gauges have a special material coating on the components in contact with the medium which protect them from corrosion.

Measuring principle

A diaphragm built onto the edge is subjected to pressure from one side. The pressure bends the diaphragm and an indicator mechanism converts the amount it is bent into a corresponding movement of the pointer. The scale on the dial then shows the actual pressure. Because of the diaphragm's shape and the fact that it is mounted on the side means it is mechanically very stable, and consequently less susceptible to vibration than Bourdon gauges.

Unifilar drawing

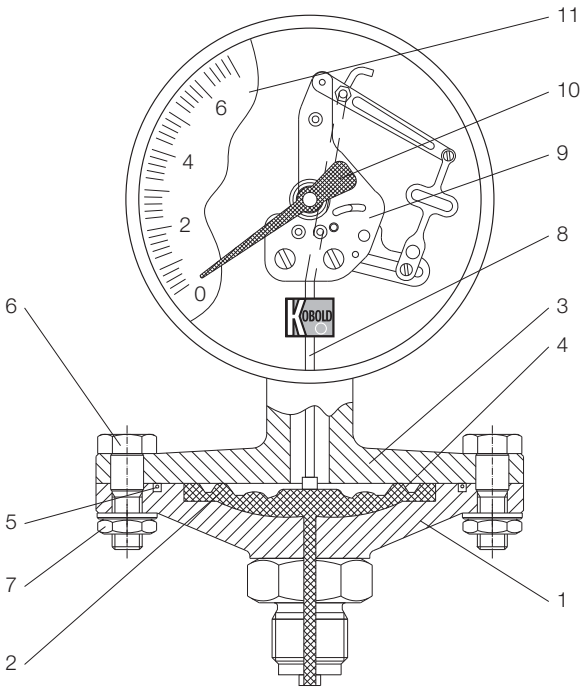

Housing

The following housing diameters are available:

100 mm and 160 mm. The housing material is stainless steel.

Installation

The gauges are most often installed straight into the customer's screw necks. Open measuring flanges for special operational conditions are available either as Norm or customer specifications.

Connection

The gauges are supplied with a G½ connecting thread as standard. The connection is made of stainless steel. Various open flanges are available for viscous, crystallising, or soiled media. Other connection types, e.g. ½" NPT are available on demand.

Measuring ranges

The measuring ranges are graduated according to DIN recommendations and lie between 16 mbar and 40 bar. Other scales with measuring ranges in PSI, Pa or with your company logo are available on request.

Damping liquid

Pressure gauges with liquid filling are used in locations with high alternating dynamic loads, strong vibrations and pulses. The filling ensures easy readability through steady pointer movement even when subjected to extreme loading and heavy vibration. The lubricating effect of the glycerine also keeps wear to a minimum. Glycerine is always used as a matter of principle. In gauges with a contact or an electrical measuring transducer, liquid paraffin is used as a non-conductive alternative. Silicon fillings of various viscosities are also optionally available.

Contacts

For monitoring the system pressure, gauges with 100 mm or 160 mm diameter can be fitted with up to four limit contacts. Slow action, magnetic spring, inductive and pneumatic contacts are also available (see Chapter »Contact Fittings for Pressure Gauges«)

Fields of application

- Chemical and petrochemical industries
- Plastics and paper-manufacturing industries
- Food and beverage industries
- Machine and plant construction

Diaphragm Pressure Gauges acc. to EN 837-3 · for Stringent Demands Model MAN-P

	Standard version				All stainless steel version			
Connection/Housing	**NG 100**		**NG 160**		**NG 100**		**NG 160**	
Back connection **MAN-...**	**...PF26W...**	**...PF76W...**	**...PG26W...**	**...PG76W...**	**...PF26...**	**...PF76...**	**...PG26...**	**...PG76...**
Accuracy class	1.6				1.6			
Housing version	stainless steel 1.4301				stainless steel 1.4301			
Filling	-	glycerine*	-	glycerine*	-	glycerine*	-	glycerine*
Ring	stainless steel 1.4301				stainless steel 1.4301			
Pointer	aluminium, black anodized				aluminium, black anodized			
Movement	brass				stainless steel 1.4301			
Diameter Messflansch	100 mm (from 0.4 bar) / 160 mm (up to 250 mbar)				100 mm (from 0.4 bar) / 160 mm (up to 250 mbar)			
Window	instrument glass				instrument glass			
Measuring element	stainless steel 1.4571 / Duratherm				stainless steel 1.4571 / Duratherm			
Protection	IP 65	IP 67	IP 65	IP 67	IP 65	IP 67	IP 65	IP 67
Overrange protection	short time 1.3 times max. rating				short time 1.3 times max. rating			
Weight	see dimensions				see dimensions			
Ambient temperature	-20 ... +80 °C				-20 ... +80 °C			
Connection	stainless steel 1.4571				stainless steel 1.4571			
Thread connection	G ½ male with 10 mm boring				G ½ male with 10 mm boring			
Max. temperature of medium	80 °C				80 °C			
Contacts	max. 3, but < 60 mbar for inductive contacts only; 60/100 mbar max. 2 slow-action cont. (4 contacts on request)							
Indicating range mbar	**Code of indicating range**							
-16 ... 0 mbar	..E6	..E6	..E6	..E6	..E6	..E6	..E6	..E6
-25 ... 0 mbar	..E7	..E7	..E7	..E7	..E7	..E7	..E7	..E7
-40 ... 0 mbar	..E8	..E8	..E8	..E8	..E8	..E8	..E8	..E8
-60 ... 0 mbar	..E9	..E9	..E9	..E9	..E9	..E9	..E9	..E9
-100 ... 0 mbar	..E0	..E0	..E0	..E0	..E0	..E0	..E0	..E0
-160 ... 0 mbar	..E1	..E1	..E1	..E1	..E1	..E1	..E1	..E1
-250 ... 0 mbar	..E2	..E2	..E2	..E2	..E2	..E2	..E2	..E2
0 ... 16 mbar	..F8	..F8	..F8	..F8	..F8	..F8	..F8	..F8
0 ... 25 mbar	..F9	..F9	..F9	..F9	..F9	..F9	..F9	..F9
0 ... 40 mbar	..F0	..F0	..F0	..F0	..F0	..F0	..F0	..F0
0 ... 60 mbar	..F1	..F1	..F1	..F1	..F1	..F1	..F1	..F1
0 ... 100 mbar	..F2	..F2	..F2	..F2	..F2	..F2	..F2	..F2
0 ... 160 mbar	..F3	..F3	..F3	..F3	..F3	..F3	..F3	..F3
0 ... 250 mbar	..F4	..F4	..F4	..F4	..F4	..F4	..F4	..F4
Indicating range bar								
-0.4 ... 0 bar	..AB	..AB	..AB	..AB	..AB	..AB	..AB	..AB
-0.6 ... 0 bar	..AC	..AC	..AC	..AC	..AC	..AC	..AC	..AC
-1 ... 0 bar	..AD	..AD	..AD	..AD	..AD	..AD	..AD	..AD
-1 ... +0.6 bar	..A0	..A0	..A0	..A0	..A0	..A0	..A0	..A0
-1 ... +1.5 bar	..A1	..A1	..A1	..A1	..A1	..A1	..A1	..A1
-1 ... +3 bar	..A2	..A2	..A2	..A2	..A2	..A2	..A2	..A2
-1 ... +5 bar	..A3	..A3	..A3	..A3	..A3	..A3	..A3	..A3
-1 ... +9 bar	..A4	..A4	..A4	..A4	..A4	..A4	..A4	..A4
-1 ... +15 bar	..A5	..A5	..A5	..A5	..A5	..A5	..A5	..A5
0 ... 0.4 bar	..BA	..BA	..BA	..BA	..BA	..BA	..BA	..BA
0 ... 0.6 bar	..B1	..B1	..B1	..B1	..B1	..B1	..B1	..B1
0 ... 1 bar	..B2	..B2	..B2	..B2	..B2	..B2	..B2	..B2
0 ... 1.6 bar	..B3	..B3	..B3	..B3	..B3	..B3	..B3	..B3
0 ... 2.5 bar	..B4	..B4	..B4	..B4	..B4	..B4	..B4	..B4
0 ... 4 bar	..B5	..B5	..B5	..B5	..B5	..B5	..B5	..B5
0 ... 6 bar	..B6	..B6	..B6	..B6	..B6	..B6	..B6	..B6
0 ... 10 bar	..B7	..B7	..B7	..B7	..B7	..B7	..B7	..B7
0 ... 16 bar	..B8	..B8	..B8	..B8	..B8	..B8	..B8	..B8
0 ... 25 bar	..B9	..B9	..B9	..B9	..B9	..B9	..B9	..B9
0 ... 40 bar	..B0	..B0	..B0	..B0	..B0	..B0	..B0	..B0

* Special filling: Paraffin oil with higher temperatures (on request) or with contacts

Options

- Open measuring flange DIN 2501, DN 25, DN 50, DN 100
- Open measuring flange ANSI B 16.5 class 150, ¾", 1", 1 ¼", 1 ½", 2", 2 ½", 3"
- Open measuring flange PTFE-beschichtet DIN 2501, DN 25, DN 50
- Open measuring flange Hardrubber coated DIN 2501, DN 25, DN 50
- Other measuring flanges or NPT connections on request
- Special materials for wetted parts
- Measuring spring welded
- Measuring spring PTFE-coated
- PTFE-coating
- 4-fold overpressure save
- Overpressure save effusion up to max. 40 bar

Dimensions

Standard version

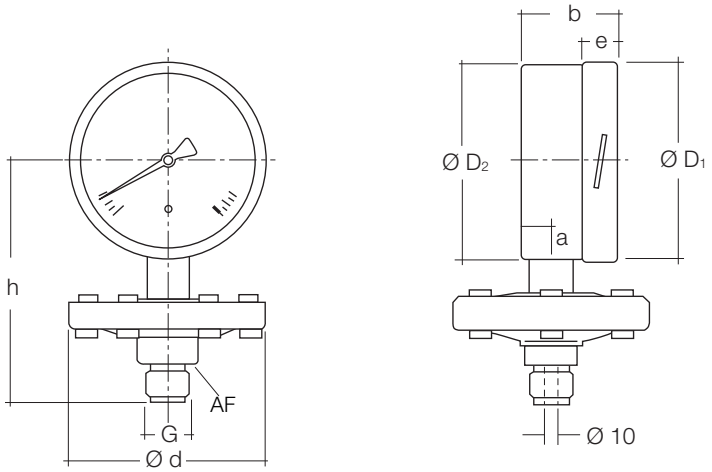

NG	Indicating range [bar]	Dimensions [mm]									Weight [kg]	
		d	a	b	D_1	D_2	e	G	h±2	AF	unfilled	filled
100	≤ 0.25	160	15,5	48	101	99	17.5	G½	135	27	3.0	3.4
160				50	161	159			165		3.5	4.3
100	≥ 0.4	100	15,5	48	101	99	17.5	G½	135	27	1.7	2.1
160				50	161	159			165		2.2	3.0

with Contact Device

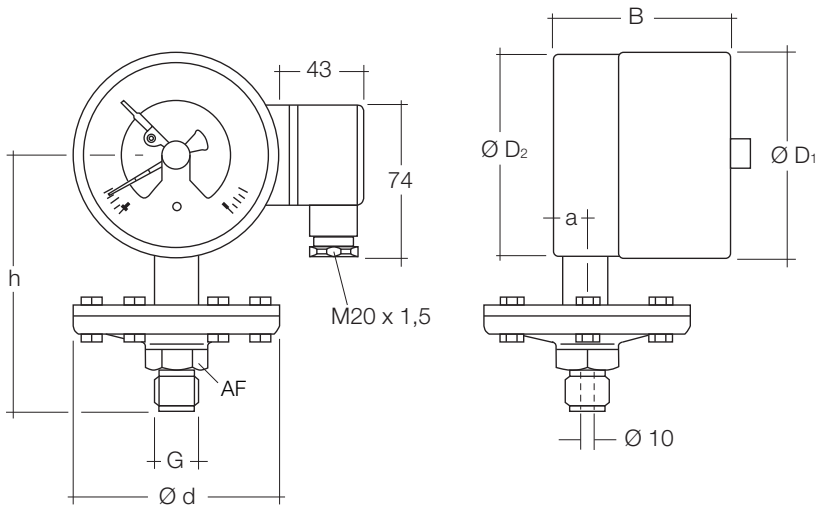

NG	Indicating range [bar]	Dimensions [mm]									approx. Weight [kg]			
		Ø d	a	B ±1 with		D_1	D_2	G	h±2	AF	unfilled with		filled with	
				1+2 cont.	3 cont.						1+2 cont.	3 cont.	1+2 cont.	3 cont.
100	≤ 0.25	160	15.5	82	97	101	99	G½	135	27	3.2	3.3	3.9	4.0
160				101	120	161	159		165		3.8	3.9	5.3	5.7
100	≥ 0.4	100	15.5	82	97	101	99	G½	135	27	1.9	2.0	2.6	2.7
160				101	120	161	159		165		2.5	2.9	4.0	4.4

1/04-2014

Options with connection flange according to DIN

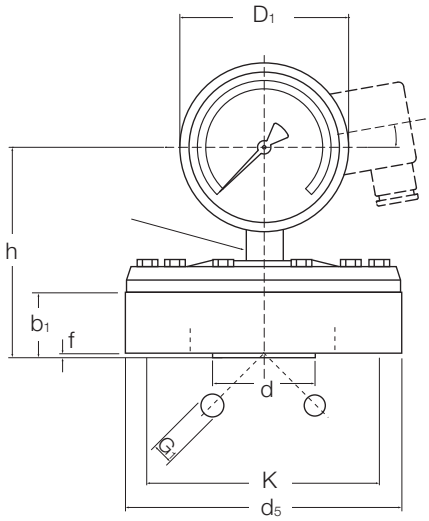

NG	DN 15 PN 10 ... 40[1]	Dimensions [mm]							Weight[2] [kg]
		d_5	k	d	b_1	f	G_1	h±2	
100	≤ 0.25	160	65	15	30	3	4xM12	106	2.5
160								138	2.5
100	≥ 0.4	100	65	15	30	3	4xM12	106	0.9
160								138	0.9

NG	DN 25 PN 10 ... 40[1]	Dimensions [mm]							Weight[2] [kg]
		d_5	k	d	b_1	f	G_1	h±2	
100	≤ 0.25	160	85	25	30	3	4xM12	106	2.5
160								138	2.5
100	≥ 0.4	115	85	25	30	3	4xM12	106	1.3
160								138	1.3

NG	DN 32 PN 10 ... 40[1]	Dimensions [mm]							Weight[2] [kg]
		d_5	k	d	b_1	f	G_1	h±2	
100	≤ 0.25	160	100	32	30	3	4xM16	106	2.5
160								138	2.5
100	≥ 0.4	100	100	32	30	3	4xM16	106	2.1
160								138	2.1

NG	DN 40 PN 10 ... 40[1]	Dimensions [mm]							Weight[2] [kg]
		d_5	k	d	b_1	f	G_1	h±2	
100	≤ 0.25	160	110	40	30	3	4xM16	106	2.5
160								138	2.5
100	≥ 0.4	150	110	40	30	3	4xM16	106	2.5
160								138	2.5

[1] Can be flanged on counter flange according to, Form D according to DIN 2526 sealing strip.

[2] The weights given are additional masses that have to be added to the weight of the standard model (with G½ A connection according to DIN 16 288).

Options with connection flange according to DIN

NG	DN 50 PN 10 ... 40[1]	Dimensions [mm]							Weight[2] [kg]
		d_5	k	d	b_1	f	G_1	h±2	
100	≤ 0.25	165	125	50	30	3	4xM16	106	2.8
160								138	2.8
100	≥ 0.4	165	125	50	30	3	4xM16	106	3.1
160								138	3.1

NG	DN 65 PN 10 ... 40[1]	Dimensions [mm]							Weight[2] [kg]
		d_5	k	d	b_1	f	G_1	h±2	
100	≤ 0.25	185	145	64	30	3	4xM16	106	3.6
160								138	3.6
100	≥ 0.4	185	145	64	30	3	4xM16	106	4.0
160								138	4.0

NG	DN 80 PN 10 ... 40[1]	Dimensions [mm]							Weight[2] [kg]
		d_5	k	d	b_1	f	G_1	h±2	
100	≤ 0.25	200	160	64	30	3	4xM16	106	4.3
160								138	4.3
100	≥ 0.4	200	160	64	30	3	4xM16	106	4.7
160								138	4.7

NG	DN 100 PN 10/16[1]	Dimensions [mm]							Weight[2] [kg]
		d_5	k	d	b_1	f	G_1	h±2	
100	≤ 0.25	220	180	64	30	3	8xM16	106	5.4
160								138	5.4
100	≥ 0.4	220	180	64	30	3	8xØ18	106	5.8
160								138	5.8

NG	DN 100 PN 25/40[1]	Dimensions [mm]							Weight[2] [kg]
		d_5	k	d	b_1	f	G_1	h±2	
100	≤ 0.25	235	190	64	30	3	8xM20	106	6.3
160								138	6.3
100	≥ 0.4	235	190	64	30	3	8xØ22	106	6.7
160								138	6.7

[1] Can be flanged on counter flange according to, Form D according to DIN 2526 sealing strip.

[2] The weights given are additional masses that have to be added to the weight of the standard model (with G½ A connection according to DIN 16 288).

M-Zert
Zertifiziertes QM-System
DIN EN ISO 9001
Zertifikat-Nr. 01017

All Stainless Steel Bourdon Tube Pressure Gauges

for Industrial Applications

KOBOLD

measuring • monitoring • analysing

MAN-R

- Housing:
  63 mm, 100 mm, 160 mm
  (option: 80 mm)
- Connection:
  G¼ (63 mm housing)
  G½ (100,160 mm housing)
- Material
  Housing: stainless steel
  Connection: stainless steel
- Measuring ranges:
  -1 ... 0 bar ... 0 ... +1000 bar
- Accuracy class:
  1.0 (1.6 with 63 mm)
- Option: damping liquid, contacts, transmitter

KOBOLD companies worldwide:
ARGENTINA, AUSTRIA, BELGIUM, BULGARIA, CANADA, CHILE, CHINA, COLOMBIA, CZECHIA, DOMINICAN REPUBLIC, EGYPT, FRANCE, GERMANY, GREAT BRITAIN, HUNGARY, INDIA, INDONESIA, ITALY, MALAYSIA, MEXICO, NETHERLANDS, PERU, POLAND, ROMANIA, SINGAPORE, SOUTH KOREA, SPAIN, SWITZERLAND, TAIWAN, THAILAND, TUNISIA, TURKEY, USA, VIETNAM

KOBOLD Messring GmbH
Nordring 22-24
D-65719 Hofheim/Ts.
Head Office:
+49(0)6192 299-0
+49(0)6192 23398
info.de@kobold.com
www.kobold.com

Application

The KOBOLD all stainless steel pressure gauges are ideal for the hard conditions and the resulting high demands on pressure measurement in production facilities in chemical industry and other comparable areas. Resistance to aggressive media and environments is achieved by using high-graded materials such as stainless steel both for the movement and the housing. They can be used for liquid or gaseous substances which do not crystallize and are not highly viscous. The extensive range of options allows the user to adapt the instruments to his own special requirements. All the pressure gauges comply with general international guidelines and take account of standard as well as application-specific requirements. They are the result of the over 70 years experience we have in building pressure gauges.

Measuring principle

Mechanical pressure measurement uses the principle of an elastic measuring element, which generates a precisely defined, reproducible deflection when subjected to pressure. The motion works convert this into a rotary motion of the pointer.The pressure at the measuring element can be read on the scale of the dial.

Unifilar drawing

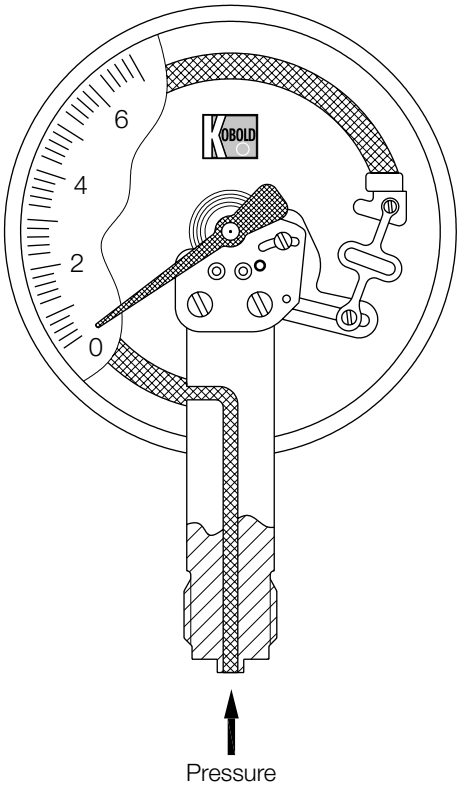

Housing

The following housing diameters are available:

63 mm, 100 mm and 160 mm. The housing material is stainless steel. The gauges can also be produced in nominal size 80 mm.

Installation

The gauges are most often installed straight into the customer's screw necks. Depending on the required installation the instruments can be supplied with a panel clamp, triangular front ring or mounting flange.

Connection

The gauges with 63 and 80 mm housing diameter are supplied with a G¼ connecting thread as standard, gauges with housing diameter of 100 mm and above with G½ connecting thread. The connection is made of stainless steel. Diaphragm seals can be mounted for viscous, crystallising, aggressive materials or higher temperature materials to prevent the material being measured from penetrating into the measuring system. Other connection types are available on request.

Measuring ranges

The measuring ranges are graduated according to DIN recommendations and lie between -1...0 bar and 0...1000 bar. Other scales with measuring ranges up to 4000 bar or scales in PSI, Pa or with your company logo are available on request.

Damping liquid

Pressure gauges with liquid filling are used in locations with high alternating dynamic loads, strong vibrations and pulses. The filling ensures easy readability through steady pointer movement even when subjected to extreme loading and heavy vibration. The lubricating effect of the glycerine also keeps wear to a minimum. Glycerine is always used as a matter of principle. In gauges with a contact or an electrical measuring transducer, liquid paraffin is used as a non-conductive alternative. Silicon fillings of various viscosities are also optionally available.

Contacts

For monitoring the system pressure, gauges with 100 mm or 160 mm diameter can be fitted with up to four limit contacts. Slow action, magnetic spring, inductive and pneumatic contacts are also available (see Chapter »Contact Fittings for Pressure Gauges«).

Fields of application:

- Chemical and petrochemical industries
- Plastics and paper-manufacturing industries
- Food and beverage industries
- Machine and plant construction

1/10-2013

All Stainless Steel Bourdon Tube Pressure Gauges Model MAN-R

Technical Data

* Special filling: Paraffin oil for higher temperatures (on request) or with contacts.

Connection/Housing	NG 63		NG 100		NG 160	
	Model					
Bottom connection  **MAN-...**	**...RD25...**	**...RD75...**	**...RF26...**	**...RF76...**	**...RG26...**	**...RG76...**
Back connection  **MAN-...**	**...RD27...** centrical	**...RD77...** centrical	**...RF28...** eccentrical	**...RF78...** eccentrical	**...RG28...** eccentrical	**...RG78...** eccentrical
Triangular front ring Back connection  **MAN-...**	**...RD27B...** centrical	**...RD77B...** centrical	**...RF28K...** eccentrical	-	**...RG28K...** eccentrical	**...RG78K...** eccentrical
Front flange Back connection  **MAN-...**	**...RD27V...** centrical	**...RD77V...** centrical	**...RF28V...** eccentrical	**...RF78V...** eccentrical	**...RG28V...** eccentrical	**...RG78V...** eccentrical
Accuracy class	1.6		1.0			
Housing material	stainless steel 1.4301					
Filling	-	glycerine*	-	glycerine*	-	glycerine*
Bezel	stainless steel 1.4301					
Pointer	aluminium, black anodized					
Movement	stainless steel					
Throttle D=	from 60 bar D = 0.5 mm					
Glass	Polyamide		safety glass			
Measuring element	stainless steel 1.4571					
Protection	IP 65	IP 67	IP 65	IP 67	IP 65	IP 67
Overrange protection	none		short time 1.3 times (from 1000 bar 1.1x) of full scale			
Weight	see table					
Ambient temperature	-20 ... +80 °C	-20 ... +60 °C	-20 ... +80 °C	-20 ... +60 °C	-20 ... +80 °C	-20 ... +60 °C
Connection	stainless steel 1.4571					
Thread connection	G ¼ male		G ½ male			
Max. medium temperature	80 °C					
Contacts	none		max. 4 cont.	max. 3 cont.	max. 4 cont.	max. 3 cont.
Indicating range	**Code of indicating range**					
-0.6 ... 0 bar	-	-	..AC	..AC	..AC	..AC
-1 ... 0 bar	..AD	..AD	..AD	..AD	..AD	..AD
-1 ... +0.6 bar	..A0	..A0	..A0	..A0	..A0	..A0
-1 ... +1.5 bar	..A1	..A1	..A1	..A1	..A1	..A1
-1 ... +3 bar	..A2	..A2	..A2	..A2	..A2	..A2
-1 ... +5 bar	..A3	..A3	..A3	..A3	..A3	..A3
-1 ... +9 bar	..A4	..A4	..A4	..A4	..A4	..A4
-1 ... +15 bar	..A5	..A5	..A5	..A5	..A5	..A5
0...0.6 bar	-	-	-	..B1	..B1	..B1
0...1 bar	..B2	..B2	..B2	..B2	..B2	..B2
0...1,6 bar	..B3	..B3	..B3	..B3	..B3	..B3
0...2,5 bar	..B4	..B4	..B4	..B4	..B4	..B4
0...4 bar	..B5	..B5	..B5	..B5	..B5	..B5
0...6 bar	..B6	..B6	..B6	..B6	..B6	..B6
0...10 bar	..B7	..B7	..B7	..B7	..B7	..B7
0...16 bar	..B8	..B8	..B8	..B8	..B8	..B8
0...25 bar	..B9	..B9	..B9	..B9	..B9	..B9
0...40 bar	..B0	..B0	..B0	..B0	..B0	..B0
0...60 bar	..C1	..C1	..C1	..C1	..C1	..C1
0...100 bar	..C2	..C2	..C2	..C2	..C2	..C2
0...160 bar	..C3	..C3	..C3	..C3	..C3	..C3
0...250 bar	..C4	..C4	..C4	..C4	..C4	..C4
0...400 bar	..C5	..C5	..C5	..C5	..C5	..C5
0...600 bar	..C6	..C6	..C6	..C6	..C6	..C6
0...1000 bar	..D7	..D7	..D7	..D7	..D7	..D7

Dimensions

Bottom connection

Code	NG	A	B without contact	B 1 or 2 contacts	B 3 contacts	B 4 contacts	C	d	D	E	H	SW	W	X
MAN-RD 25/75	63 mm	6	31	-	-	-	13	62	68	55	-	14	-	-
MAN-RF 26/76	100 mm	17	48	82	97	110	15	100	101	86.5	54	22	0	88
MAN-RG 26/76	160 mm	21	50	101	120	120	15	159	162	117	56	22	0	118

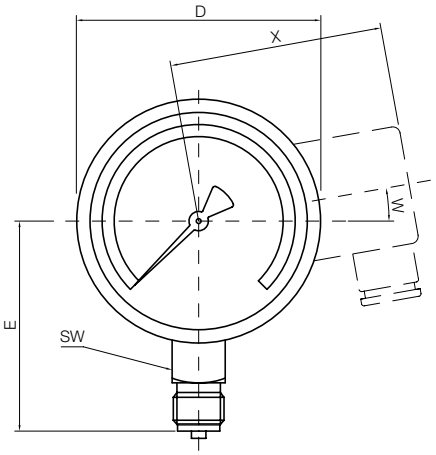

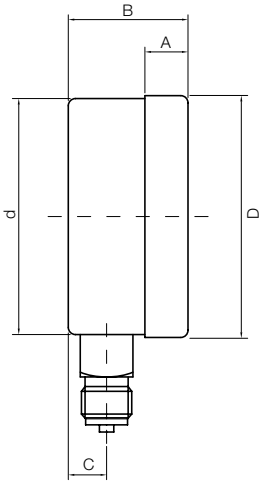

Back connection

Code	NG	A	B without contact	B 1 or 2 contacts	B 3 contacts	B 4 contacts	C	d	D	E	H	SW	W	X
MAN-RD 27/77	63 mm	6	28	-	-	-	26	63	68	0	-	14	-	-
MAN-RF 28/78	100 mm	17	49	82	97	110	34	100	101	32.5	54	22	0	88
MAN-RG 28/78	160 mm	21	50	101	120	120	34	159	162	32.5	56	22	0	118

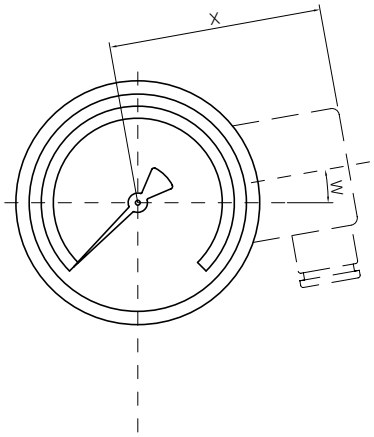

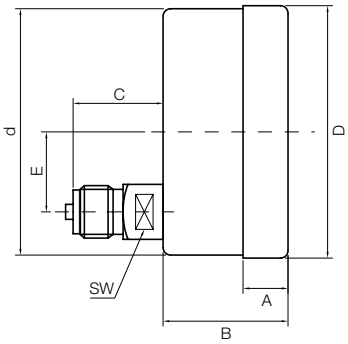

Dimensions

Triangular front ring with clamp

Code	NG	A	B without contact	B 1 or 2 contacts	B 3 contacts	B 4 contacts	C	d	D	E	SW	W	X
MAN-RD 27/77	63 mm	6	26	-	-	-	26	62	68	0	14	-	-
MAN-RF 28 K	100 mm	5	41	88	105	105	34	101	107	32.5	22	0	42
MAN-RG 28/78 K	160 mm	5	44	98	145	145	30	160	162	50	22	0	42

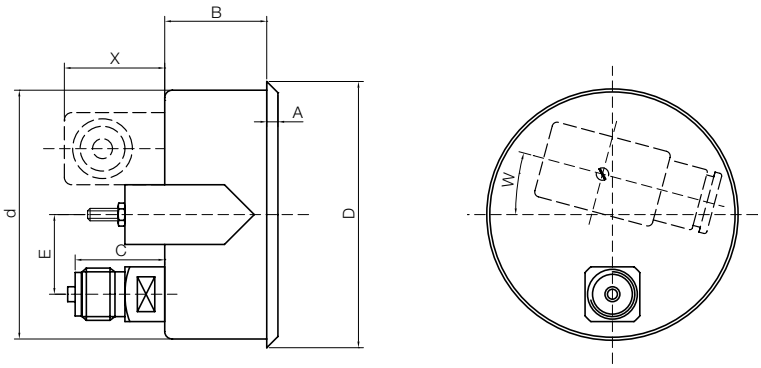

Front flange

Code	NG	A	B without contact	B 1 or 2 contacts	B 3 contacts	B 4 contacts	C	d	D	D2	E	LK	S	SW	W	X
MAN-RD 27/77 V	63 mm	7	24	-	-	-	26	62	68	85	0	75	1	14	-	-
MAN-RF 28/78 V	100 mm	6	43	86	92	105	34	104	101	132	32.5	116	2	22	15	42
MAN-RG 28/78 V	160 mm	6	43	95	110	110	34	164	161	196	32.5	178	2	22	15	42

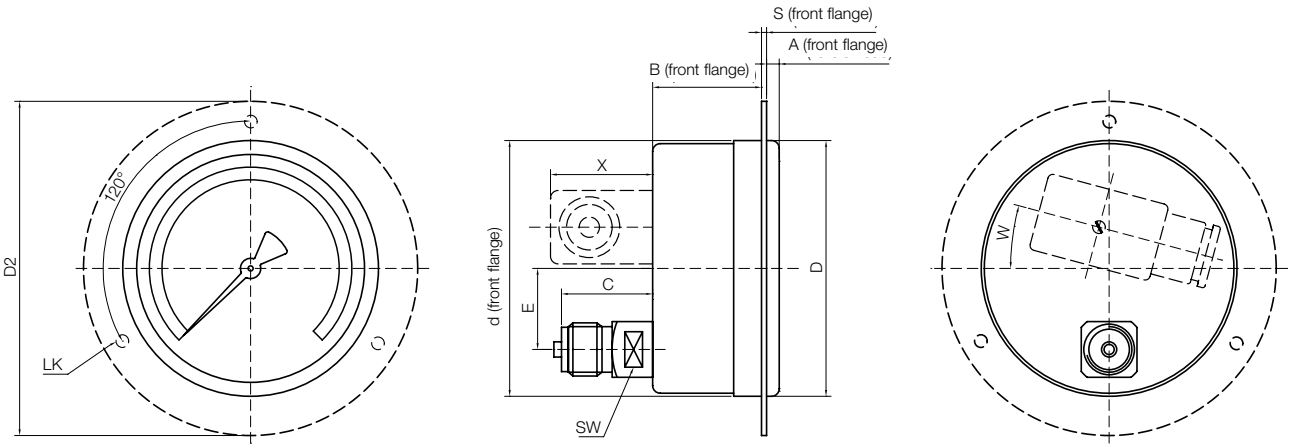

Weights

NG 63		without contact	up to 2 contacts	3 contacts	4 contacts
Code	**Housing-filling**	**Weight [kg]**	**Weight [kg]**	**Weight [kg]**	**Weight [kg]**
MAN-RD 25	without	0.13	-	-	-
MAN-RD 27	without	0.12	-	-	-
MAN-RD 27B	without	0.15	-	-	-
MAN-RD 27V	without	0.15	-	-	-
MAN-RD 75	with	0.21	-	-	-
MAN-RD 77	with	0.20	-	-	-
MAN-RD 77B	with	0.23	-	-	-
MAN-RD 77V	with	0.23	-	-	-

NG-100					
MAN-RF 26	without	0.5	0.7	0.75	0.8
MAN-RF 28	without	0.5	0.7	0.75	0.8
MAN-RF 28K	without	0.6	0.8	0.85	0.9
MAN-RF 28V	without	0.6	0.8	0.85	0.9
MAN-RF 76	with	0.8	1.2	1.3	-
MAN-RF 78	with	0.8	1.2	1.3	-
MAN-RF 78 V	with	0.9	1.3	1.4	-

NG 160					
MAN-RG 26	without	1.0	1.3	1.4	1.5
MAN-RG 28	without	1.0	1.3	1.4	1.5
MAN-RG 28 K	without	1.1	1.4	1.5	1.6
MAN-RG 28 V	without	1.1	1.5	1.6	1.7
MAN-RG 76	with	1.8	2.8	3.2	-
MAN-RG 78	with	1.8	2.8	3.2	-
MAN-RG 78 K	with	1.9	2.9	3.3	-
MAN-RG 78 V	with	1.9	2.9	3.3	-

1/10-2013

Zertifiziertes QM-System
DIN EN ISO 9001
Zertifikat-Nr. 01017

Bourdon Tube Pressure Gauges

acc. to EN 837 · for Industrial Applications

measuring • monitoring • analysing

MAN-R / MAN-Q

- Housing:
  63 mm, 80 mm, 100 mm, 160 mm
  Rectangular Casing:
  96 x 96 mm, 144 x144 mm
  Options:
  40 mm, 50 mm, 250 mm, 400 mm
- Connection:
  G¼ (63, 80 mm housing)
  G½ (100,160 mm housing)
- Material
  Housing: stainless steel, aluminium
  Connection: brass
- Measuring ranges:
  -1 ... 0 bar ... 0 ... +1000 bar
- Options: liquid filling;
  contacts; transmitter

P1

KOBOLD companies worldwide:
ARGENTINA, AUSTRIA, BELGIUM, BULGARIA, CANADA, CHILE, CHINA, COLOMBIA, CZECHIA, DOMINICAN REPUBLIC, EGYPT, FRANCE, GERMANY, GREAT BRITAIN, HUNGARY, INDIA, INDONESIA, ITALY, MALAYSIA, MEXICO, NETHERLANDS, PERU, POLAND, ROMANIA, SINGAPORE, SOUTH KOREA, SPAIN, SWITZERLAND, TAIWAN, THAILAND, TUNISIA, TURKEY, USA, VIETNAM

KOBOLD Messring GmbH
Nordring 22-24
D-65719 Hofheim/Ts.
Head Office:
+49(0)6192 299-0
+49(0)6192 23398
info.de@kobold.com
www.kobold.com

Application

These KOBOLD pressure gauges can be used for all applications where accuracy, repeatability and long-term stability are of special importance. They can be used for liquid or gaseous substances which do not crystallize, are not highly viscous and do not corrode brass.

The extensive range of options allows the user to adapt the instruments to his own special requirements. All the pressure gauges comply with general international guidelines and take account of standard as well as application-specific requirements. KOBOLD Bourdon tube pressure gauges are the re sult of over 70 years experience in building pressure gauges.

Measuring principle

Mechanical pressure measurement uses the principle of an elastic measuring element, which generates a precisely defined, reproducible deflection when subjected to pressure. The motion works convert this into a rotary motion of the pointer. The pressure at the measuring element can be read on the scale of the dial.

Housing

The following housing diameters are available: 63 mm, 80 mm, 100 mm and 160 mm. The housing is made of stainless steel. As an alternative to the 100 mm or 160 mm diameter pressure gauge, the devices can also be supplied with a robust aluminium housing. This option is only available from KOBOLD and has proven ideal for very robust use in filled equipment, e.g. in ship's diesel engines. It is also available with a rectangular profile housing for integration into control panels. This is available as 96 x 96 mm and 144 x 144 mm versions. Housings are optionally available with 40 mm, 50 mm, 250 mm or 400 mm nominal diameters.

Unifilar drawing

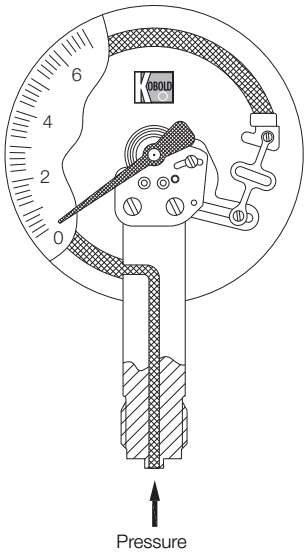

Installation

The gauges are most often installed straight into the customer's screw necks. Optional gauge models with an installation border on the front are also available for installation into or onto control panels.

Connection

The gauges with 63 and 80 mm housing diameter are supplied with a G¼ connecting thread as standard, gauges with housing diameter of 100 mm and above with G½ connecting thread. The connection is made of brass. Diaphragm seals can be mounted for viscous, crystallising, aggressive materials or higher temperature materials to prevent the material being measured from penetrating into the measuring system. Other connection types are available on request.

Measuring ranges

The measuring ranges are graduated according to DIN re commendations and lie between -1...0 bar and 0...1000 bar. Other scales with measuring ranges in PSI, Pa or with your company logo are available on request.

Damping liquid

Pressure gauges with liquid filling are used in locations with high alternating dynamic loads, strong vibrations and pulses. The filling ensures easy readability through steady pointer movement even when subjected to extreme loading and heavy vibration. The lubricating effect of the glycerine also keeps wear to a minimum. Glycerine is always used as a matter of principle. In gauges with a contact or an electrical measuring transducer, liquid paraffin is used as a non-conductive alternative. Silicon fillings of various viscosities are also optionally available.

Contacts

For monitoring the system pressure, gauges with 100 mm or 160 mm diameter can be fitted with up to four limit contacts. Slow action, magnetic spring, inductive and pneumatic contacts are also available (see Chapter »Contact Fittings for Pressure Gauges«).

Fields of application

- Mechanical engineering
- Hydraulics
- Compressors
- Pumps
- Plant construction

Bourdon Tube Pressure Gauges according to EN 837 for Industrial Applications Model MAN-R/MAN-Q

Technical Details · NG 63/80, Rectangular Casing

	Round housing			Profile housing	
Connection/Housing	**NG 63**	**NG 63**	**NG 80**	**96x96**	**144x144**
	Model				
Bottom connection **MAN-...**	**...RD21...**	**...RD71...**	**...RE22...**	-	-
Back connection **MAN-...**	**...RD23...** centrical	**...RD73...** centrical	**...RE24...** eccentric	-	-
Triangular front ring with clamp, Back connection **MAN-...**	**...RD23B...** centrical	**...RD73B...** centrical	**...RE24K...** eccentric	**...QF14B...**	**...QG14B...**
Front flange Back connection **MAN-...**	**...RD23V...** centrical	**...RD73V...** centrical	**...RE24V...** eccentric	-	-
Accuracy class	1.0		1.6		
Housing version	stainless steel 1.4301			steel, nickel plated	
Filling	-	glycerine	-	-	-
Ring/housing	stainless steel 1.4301			light metal / steel, nickel plated	
Pointer	aluminium, black anodized, partly plastic			aluminium, black anodized	
Movement	brass				
Throttle	from 60 bar D = 0.5 mm				
Window	Polycarbonate		instrument glass		
Measuring element	CuSn (from 100 bar stainless steel 1.4571)				
Protection	IP 65	IP 67	IP 65	IP 54 from ahead	
Overrange protection	1.2 times		short-term 1.3 times (from 1000 bar 1.1 times) of full scale		
Weight	siehe Tabelle		0.4 kg	0.7 kg	1.2 kg
Ambient temperature	-20...+60 °C				
Connection	brass				
Thread connection	G ¼ male			G ½ male	
Max. medium temperature	80 °C				
Contacts	no			yes, max. 4 contacts	
Options	Trailing pointer, marking pointer, oil-free and decreased, special scale				
Indicating range	**Code of indicating range**				
-0.6...0 bar	-	-	..AC	..AC	..AC
-1...0 bar	..AD	..AD	..AD	..AD	..AD
-1...+0.6 bar	..A0	..A0	..A0	..A0	..A0
-1...+1.5 bar	..A1	..A1	..A1	..A1	..A1
-1...+3 bar	..A2	..A2	..A2	..A2	..A2
-1...+5 bar	..A3	..A3	..A3	..A3	..A3
-1...+9 bar	..A4	..A4	..A4	..A4	..A4
-1...+15 bar	..A5	..A5	..A5	..A5	..A5
0...0.6 bar	-	-	-	..B1	..B1
0...1 bar	..B2	..B2	..B2	..B2	..B2
0...1.6 bar	..B3	..B3	..B3	..B3	..B3
0...2.5 bar	..B4	..B4	..B4	..B4	..B4
0...4 bar	..B5	..B5	..B5	..B5	..B5
0...6 bar	..B6	..B6	..B6	..B6	..B6
0...10 bar	..B7	..B7	..B7	..B7	..B7
0...16 bar	..B8	..B8	..B8	..B8	..B8
0...25 bar	..B9	..B9	..B9	..B9	..B9
0...40 bar	..B0	..B0	..B0	..B0	..B0
0...60 bar	..C1	..C1	..C1	..C1	..C1
0...100 bar	..C2	..C2	..C2	..C2	..C2
0...160 bar	..C3	..C3	..C3	..C3	..C3
0...250 bar	..C4	..C4	..C4	..C4	..C4
0...400 bar	..C5	..C5	..C5	..C5	..C5
0...600 bar	..C6	..C6	..C6	..C6	..C6
0...1000 bar	-	-	-	..D7	..D7

Bourdon Tube Pressure Gauges according to EN 837 for Industrial Applications Model MAN-R/MAN-Q

Technical Details · NG 100

Connection/Housing		**Model**			
Bottom connection	**MAN-...**	**...RF22...**	**...RF32...**	**...RF72...**	**...RF62...**
Back connection	**MAN-...**	**...RF24...** eccentric	**...RF34...** eccentric	**...RF74...** eccentric	**...RF64...** eccentric
Triangular front ring with clamp, back connection	**MAN-...**	**...RF24K...** eccentric	**...RF34K...** eccentric	**-**	**...RF64K...** eccentric
Front flange Back connection	**MAN-...**	**...RF24V...** eccentric	**...RF34V...** eccentric	**...RF74V...** eccentric	**...RF64V...** eccentric
Accuracy class		1.0			
Housing version		stainless steel 1.4301	aluminium	stainless steel 1.4301	aluminium
Filling		-	-	glycerine (paraffin with contact)	
Ring		stainless steel 1.4301	steel black	stainless steel 1.4301	steel black
Pointer		aluminium, black anodized			
Movement		brass			
Throttle		from 60 bar D = 0.5 mm			
Window		instrument glass			
Measuring element		CuSn (from 100 bar stainless steel 1.4571)			
Protection		IP 65		IP 67	
Overrange protection		short-term 1.3 times (from 1000 bar 1.1 times) of full scale			
Weight		see table			
Ambient temperature		-20 ... +60 °C			
Connection		brass			
Thread connection		G ½ male			
Max. medium temperature		80 °C			
Contacts		max. 3	max. 4	max. 3	max. 4
Options		Trailing pointer, marking pointer, oil-free and decreased, special scale			
Indicating range		**Code of indicating range**			
-0.6 ... 0 bar		..AC	..AC	..AC	..AC
-1 ... 0 bar		..AD	..AD	..AD	..AD
-1 ... +0.6 bar		..A0	..A0	..A0	..A0
-1 ... +1.5 bar		..A1	..A1	..A1	..A1
-1 ... +3 bar		..A2	..A2	..A2	..A2
-1 ... +5 bar		..A3	..A3	..A3	..A3
-1 ... +9 bar		..A4	..A4	..A4	..A4
-1 ... +15 bar		..A5	..A5	..A5	..A5
0 ... 0.6 bar		..B1	..B1	..B1	..B1
0 ... 1 bar		..B2	..B2	..B2	..B2
0 ... 1.6 bar		..B3	..B3	..B3	..B3
0 ... 2.5 bar		..B4	..B4	..B4	..B4
0 ... 4 bar		..B5	..B5	..B5	..B5
0 ... 6 bar		..B6	..B6	..B6	..B6
0 ... 10 bar		..B7	..B7	..B7	..B7
0 ... 16 bar		..B8	..B8	..B8	..B8
0 ... 25 bar		..B9	..B9	..B9	..B9
0 ... 40 bar		..B0	..B0	..B0	..B0
0 ... 60 bar		..C1	..C1	..C1	..C1
0 ... 100 bar		..C2	..C2	..C2	..C2
0 ... 160 bar		..C3	..C3	..C3	..C3
0 ... 250 bar		..C4	..C4	..C4	..C4
0 ... 400 bar		..C5	..C5	..C5	..C5
0 ... 600 bar		..C6	..C6	..C6	..C6
0 ... 1000 bar		..D7	..D7	..D7	..D7

1/04-2014

Bourdon Tube Pressure Gauges according to EN 837 for Industrial Applications Model MAN-R / MAN-Q

Technical Details · NG 160

Connection/Housing		**Model**			
Bottom connection	**MAN-...**	**...RG22...**	**...RG32...**	**...RG72...**	**...RG62...**
Back connection	**MAN-...**	**...RG24...** eccentrical	**...RG34...** eccentrical	**...RG74...** eccentrical	**...RG64...** eccentrical
Triangular front ring and clamp, back connection	**MAN-...**	**-**	**...RG34K...** eccentrical	**-**	**...RG64K...** eccentrical
Front flange Back connection	**MAN-...**	**...RG24V...** eccentrical	**...RG34V...** eccentrical	**...RG74V...** eccentrical	**...RG64V...** eccentrical
Accuracy class		1.0			
Housing version		stainless steel 1.4301	aluminium	stainless steel 1.4301	aluminium
Filling		-	-	glycerine (paraffine with contact)	
Ring		stainless steel 1.4301	steel black	stainless steel 1.4301	steel black
Pointer		aluminium, black anodized			
Movement		brass			
Throttle		from 60 bar D = 0.5 mm			
Window		instrument glass			
Measuring element		CuSn (from 100 bar stainless steel 1.4571)			
Protection		IP 65		IP 67	
Overrange protection		short-term 1.3 times (from 1000 bar 1.1 times) of full scale			
Weight		see table			
Ambient temperature		-20 ... +60 °C			
Connection		brass			
Thread connection		G ½ male			
Max. medium temperature		80 °C			
Contacts		max. 3	max. 4	max. 3	max. 4
Options		Trailing pointer, marking pointer, oil-free and decreased, special scale			
Indicating range		**Code of indicating range**			
-0.6 ... 0 bar		..AC	..AC	..AC	..AC
-1 ... 0 bar		..AD	..AD	..AD	..AD
-1 ... +0.6 bar		..A0	..A0	..A0	..A0
-1 ... +1.5 bar		..A1	..A1	..A1	..A1
-1 ... +3 bar		..A2	..A2	..A2	..A2
-1 ... +5 bar		..A3	..A3	..A3	..A3
-1 ... +9 bar		..A4	..A4	..A4	..A4
-1 ... +15 bar		..A5	..A5	..A5	..A5
0 ... 0.6 bar		..B1	..B1	..B1	..B1
0 ... 1 bar		..B2	..B2	..B2	..B2
0 ... 1.6 bar		..B3	..B3	..B3	..B3
0 ... 2.5 bar		..B4	..B4	..B4	..B4
0 ... 4 bar		..B5	..B5	..B5	..B5
0 ... 6 bar		..B6	..B6	..B6	..B6
0 ... 10 bar		..B7	..B7	..B7	..B7
0 ... 16 bar		..B8	..B8	..B8	..B8
0 ... 25 bar		..B9	..B9	..B9	..B9
0 ... 40 bar		..B0	..B0	..B0	..B0
0 ... 60 bar		..C1	..C1	..C1	..C1
0 ... 100 bar		..C2	..C2	..C2	..C2
0 ... 160 bar		..C3	..C3	..C3	..C3
0 ... 250 bar		..C4	..C4	..C4	..C4
0 ... 400 bar		..C5	..C5	..C5	..C5
0 ... 600 bar		..C6	..C6	..C6	..C6
0 ... 1000 bar		..D7	..D7	..D7	..D7

Dimensions

Bottom connection

Code	NG	A	B without contact	B 1 or 2 contacts	B 3 contacts	B 4 contacts	C	d	D	E	AF	W	X
MAN-RD 21/71	63 mm	6	31	-	-	-	13	52	68	55	14	-	-
MAN-RE 22	80 mm	5	43.5	-	-	-	16	80	84	76	22	-	-
MAN-RF 22/72	100 mm VA	17	48	82	97	110	15	100	101	86.5	22	0	88
MAN-RF 32/62	100 mm Alu	-	43	91	107	107	15	100	-	86.5	27	0	88
MAN-RG 22/72	160 mm VA	21	50	101	120	120	15	159	162	117	22	0	118
MAN-RG 32/62	160 mm Alu	-	48	101	127	127	18.5	160	-	115	27	25°	118

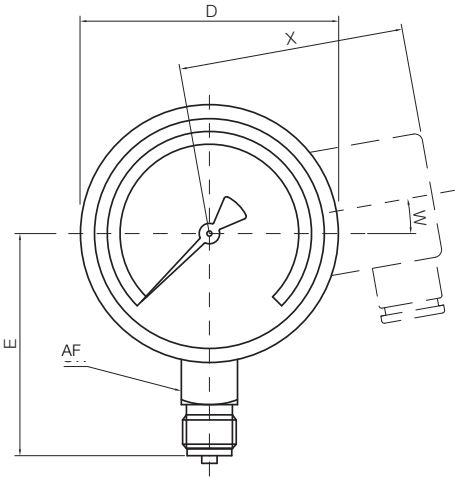

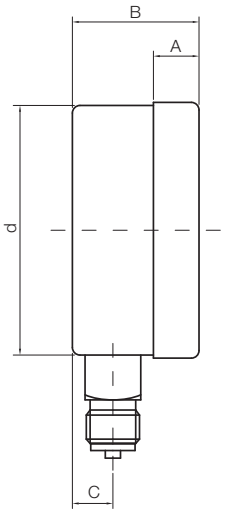

Back connection

Code	NG	A	B without contact	B 1 or 2 contacts	B 3 contacts	B 4 contacts	C	d	D	E	AF	W	X
MAN-RD 23/73	63 mm	6	28	-	-	-	26	63	68	0	14	-	-
MAN-RE 24	80 mm	5	43.5	-	-	-	35	80	84	0	22	-	-
MAN-RF 24/74	100 mm VA	17	49	82	97	110	36	100	101	32.5	17	0	88
MAN-RF 34/64	100 mm Alu	-	43	91	107	107	34	100	-	32.5	27	0	88
MAN-RG 24/74	160 mm VA	21	50	101	120	120	34	159	162	32.5	17	0	118
MAN-RG 34/64	160 mm Alu	-	48	101	127	127	30	160	-	50	27	25°	118

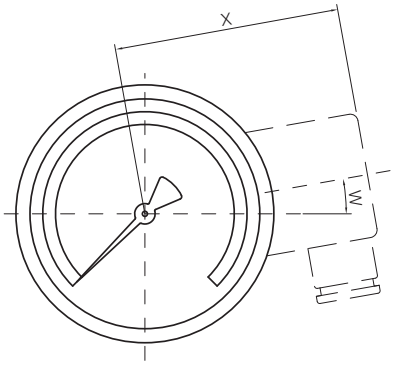

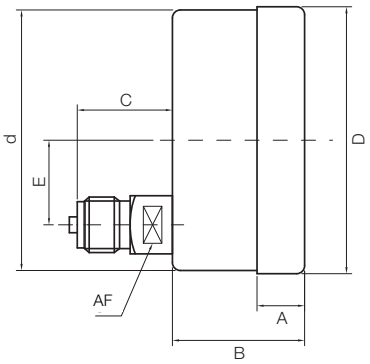

Dimensions

Triangular front ring with clamp

Code	NG	A	B without contact	B 1 or 2 contacts	B 3 contacts	B 4 contacts	C	d	D	E	AF	W	X
MAN-RD 23/73 B	63 mm	6	26	-	-	-	26	62	68	0	14	-	-
MAN-RE 24 K	80 mm	5	43.5	-	-	-	35	80	84	0	22	-	-
MAN-RF 24 K	100 mm VA	5	41	88	105	105	36	101	107	32.5	17	0	42
MAN-RF 34/64 K	100 mm Alu	5	41	88	105	105	34	100	107	32.5	27	0	42
MAN-RG 34/64 K	160 mm VA	5	45	98	145	145	30	160	162	50	22	0	42

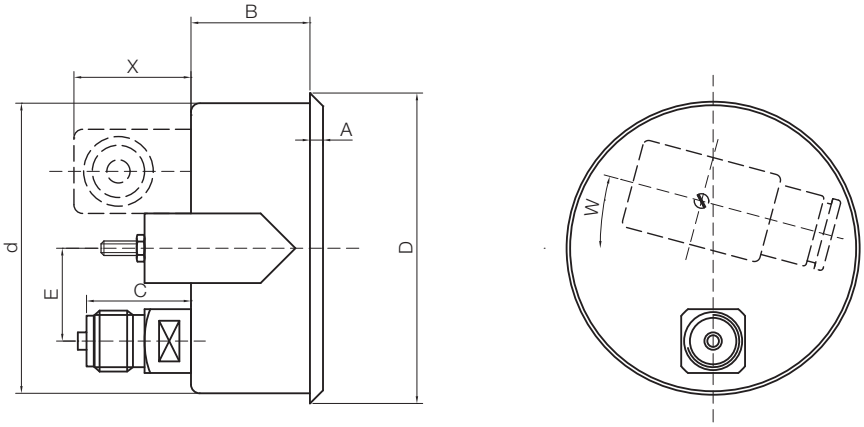

Front flange

Code	NG	A	B without contact	B 1 or 2 contacts	B 3 contacts	B 4 contacts	C	d	D	E	LK	S	AF	W	X
MAN-RD 23/73 V	63 mm	7	24	-	-	-	26	62	68	0	75	1	14	-	-
MAN-RF 24/74 V	100 mm VA	6	43	86	92	105	36	104	101	32.5	116	2	17	15	42
MAN-RF 34/64 V	100 mm Alu	5	40	86	102	102	34	100	100	32.5	116	2	27	15	42
MAN-RG 24/74 V	160 mm VA	6	43	95	110	110	34	164	161	32.5	178	2	17	15	42
MAN-RG 34/64 V	160 mm Alu	9	42	93	118	118	30	160	160	50	178	2	27	15	42

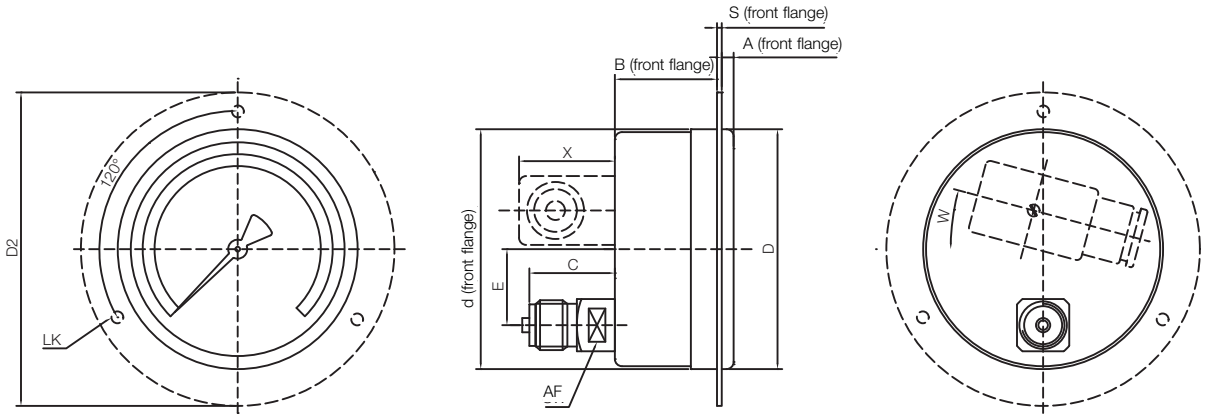

Bourdon Tube Pressure Gauges according to EN 837 for Industrial Applications Model MAN-R/MAN-Q

Dimensions

Rectangular casing

Code	NG	A	B without contact	B 1 or 2 contacts	B 3 contacts	B 4 contacts	C	d	D	E	AF	X
MAN-QF	96 x 96	9	40	81	85	92	34	90	96	32	17	42
MAN-QG	144 x 144	9	47	90	97	127	34	156	145	32	17	42

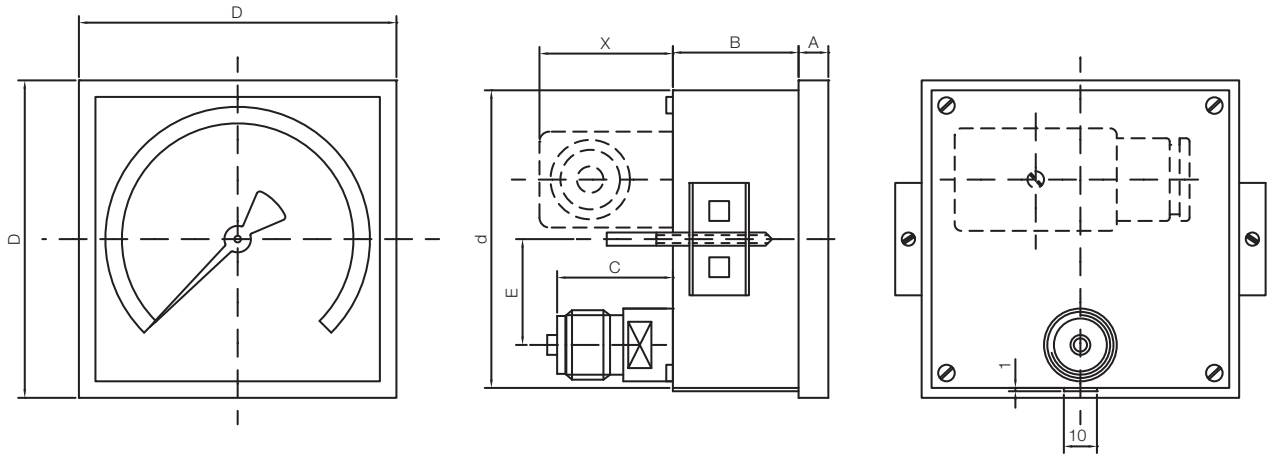

Weight

NG 63		without contact	up to 2 contacts	3 contacts	4 contacts
Code	**Housing filling**	**Weight [kg]**	**Weight [kg]**	**Weight [kg]**	**Weight [kg]**
MAN-RD 21	without	0.14	-	-	-
MAN-RD 23	without	0.15	-	-	-
MAN-RD 23 B	without	0.18	-	-	-
MAN-RD 23 V	without	0.18	-	-	-
MAN-RD 71	with	0.21	-	-	-
MAN-RD 73	with	0.22	-	-	-
MAN-RD 73 B	with	0.25	-	-	-
MAN-RD 73 V	with	0.25	-	-	-

NG 80					
MAN-RE 22	without	0.4	-	-	-
MAN-RE 24	without	0.4	-	-	-
MAN-RE 24 K	without	0.4	-	-	-
MAN-RE 24 V	without	0.4	-	-	-
MAN-RE 72	with	0.55	-	-	-
MAN-RE 74	with	0.55	-	-	-
MAN-RE 74 K	with	0.55	-	-	-
MAN-RE 74 V	with	0.55	-	-	-

NG 100					
MAN-RF 22	without	0.5	0.7	0.75	0.8
MAN-RF 24	without	0.5	0.7	0.75	0.8
MAN-RF 24 K	without	0.6	0.8	0.85	0.9
MAN-RF 24 V	without	0.6	0.8	0.85	0.9
MAN-RF 32	without	0.6	0.8	0.85	0.9
MAN-RF 34	without	0.7	0.9	0.95	1.0
MAN-RF 34 K	without	0.7	0.9	0.95	1.0
MAN-RF 34 V	without	0.7	0.9	0.95	1.0

NG 100 (continued)		without contact	up to 2 contacts	3 contacts	4 contacts
Code	**Housing filling**	**Weight [kg]**	**Weight [kg]**	**Weight [kg]**	**Weight [kg]**
MAN-RF 62	with	0.9	1.3	1.4	1.5
MAN-RF 64	with	1.0	1.4	1.5	1.6
MAN-RF 64 K	with	1.0	1.4	1.5	1.6
MAN-RF 64 V	with	1.0	1.4	1.5	1.6
MAN-RF 72	with	0.8	1.2	1.3	-
MAN-RF 74	with	0.8	1.2	1.3	-
MAN-RF 74 V	with	0.9	1.3	1.4	-

NG 160					
MAN-RG 22	without	1.0	1.3	1.4	1.5
MAN-RG 24	without	1.0	1.3	1.4	1.5
MAN-RG 24 V	without	1.1	1.4	1.5	1.6
MAN-RG 32	without	1.1	1.5	1.6	1.7
MAN-RG 34	without	1.2	1.5	1.7	1.8
MAN-RG 34 K	without	1.3	1.6	1.7	1.8
MAN-RG 34 V	without	1.3	1.6	1.7	1.8
MAN-RG 62	with	1.9	2.9	3.4	3.6
MAN-RG 64	with	1.9	2.9	3.4	3.6
MAN-RG 64 K	with	2.0	3.0	3.5	3.7
MAN-RG 64 V	with	2.0	3.0	3.5	3.7
MAN-RG 72	with	1.8	2.8	3.2	-
MAN-RG 74	with	1.8	2.8	3.2	-
MAN-RG 74 V	with	1.9	2.9	3.3	-

Zertifiziertes QM-System
DIN EN ISO 9001
Zertifikat-Nr. 01017

Pressure Gauges with Membrane Diaphragm Seal

for the Paper Industry

measuring • monitoring • analysing

MAN-RF...D

- Housing: 100 mm
- Connection: flange 85 mm
- Material: stainless steel
- Indicating range:
  0 ... 0.6 bar ... 0 ... 40 bar

P1

KOBOLD companies worldwide:
ARGENTINA, AUSTRIA, BELGIUM, BULGARIA, CANADA, CHILE, CHINA, COLOMBIA, CZECHIA, DOMINICAN REPUBLIC, EGYPT, FRANCE, GERMANY, GREAT BRITAIN, HUNGARY, INDIA, INDONESIA, ITALY, MALAYSIA, MEXICO, NETHERLANDS, PERU, POLAND, ROMANIA, SINGAPORE, SOUTH KOREA, SPAIN, SWITZERLAND, TAIWAN, THAILAND, TUNISIA, TURKEY, USA, VIETNAM

KOBOLD Messring GmbH
Nordring 22-24
D-65719 Hofheim/Ts.
Head Office:
+49(0)6192 299-0
+49(0)6192 23398
info.de@kobold.com
www.kobold.com

Pressure Gauges with Membrane Diaphragm Seal for the Paper Industry Model MAN-RF...D

Application

The KOBOLD pressure gauges with integrated diaphragm seal have been developed to also measure difficult media. The membrane prevents high-viscosity, crystallising, or pulp-containing media penetrating into the measuring element and disturbing the proper functioning of the pressure gauge. A version with a vibration damper is available especially for strong vibrations.

Measuring principle

Diaphragm seals are mounted direct to the pressure gauge or connected to the measuring unit by using capillary tube. The connection has to be hermetically sealed to ensure proper transmission of pressure by the filling media thus garanteeing the correct measurement.

The pressure in the process medium in front of the diaphragm is transmitted via the filling to the movement where it causes a deflection of the measuring element which inturn indicates the current pressure.

Housing

The housing material is from stainless steel or aluminium and the housing diameter is 100 mm.

Installation

The gauges are generally built into the piping using the diaphragm seal flange. The MAN-RF 2MD pressure gauge is supplied with a transmission line and a gauge mounting. The MAN-RF 3MD version has a transmission line and a housing for integration into control panels.

Connection

The gauges are supplied with directly attached diaphragm seals with an 85 mm stainless steel connecting flange. The diaphragm has a diameter of 48 mm. The connections can be made to lead downward, to the back or with a 90° bend to the rear.

Measuring ranges

The measuring ranges are graduated according to DIN re-commendations and lie between 0 ... 0.6 bar and 0 ... 40 bar. Measuring ranges between -1 ... +3 bar and -1 ... +15 bar are available for low pressure. Other scales with measuring ranges in PSI, Pa or with your company logo are available on request.

Operating conditions

Since the correct pressure indication is dependent on the temperature of the filling liquid, a pressure gauge with diaphragm seals have to be adjusted to suit the operating conditions. To reduce this error, the measuring systems are adjusted to suit the ambient and medium temperatures of the application. Without readings the gauges are as standard calibrated to a temperature of +20 °C (±2 °C). Gauges with a transmission line are set to a height differential of 0 m between gauge and diaphragm seal. Other height differentials must be stated when ordering because this greatly influences the accuracy of measurement, especially within small measuring ranges.

Damping liquid

Pressure gauges with liquid filling are used in locations with high alternating dynamic loads, strong vibrations and pulses. The filling ensures easy readability through steady pointer movement even when subjected to extreme loading and heavy vibration. The lubricating effect of the glycerine also keeps wear to a minimum. Glycerine is always used as a matter of principle. In gauges with a contact or an electrical measuring transducer, liquid paraffin is used as a non-conductive alternative. Silicon fillings of various viscosities are also optionally available.

Contacts

For monitoring the system pressure and controlling process flows can be fitted up to four limit contacts. Slow action, magnetic spring, inductive and pneumatic contacts are also available (see Chapter »Contact Device for Pressure Gauges«).

Application areas

- Paper industry
- Petrochemie
- Varnish industry

1/04-2014

Pressure Gauges with Membrane Diaphragm Seal for the Paper Industry Model MAN-RF...D

Pressure gauges with membrane diaphragm seal for the paper industry							
Model / Code	**MAN...**	**...RF2CD...**	**...RF2DD...**	**...RF2ED...**	**...RF2FD...**	**...RF2MD...**	**...RF3MVD...**
		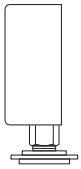	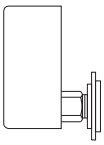	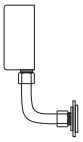	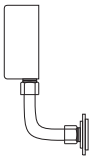	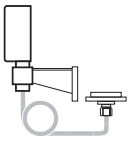	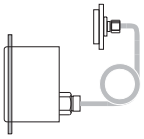
Accuracy class		1.6				1.6	
Diameter		100 mm				100 mm	
Housing version		stainless steel				stainless steel	Aluminium
Ring		stainless steel					
Pointer		Aluminium, black anodised					
Movement		brass					
Throttle D=		none					
Window		instrument glass					
Measuring element		CuSn					
Protection		IP 65 (filled housing: IP 67)					
Overrange protection		1,3-times full scale value					
Ambient temperature		-20 ... +60 °C					
Filling of diaphragm seal		paraffin oil, FDA conform (other upon request)					
Connection		bottom	back	rear with 90° elbow		1 m transmission line	
Connection flange		85 mm steel				85 mm	
Diaphragm		48 mm stainless steel				48 mm stainless steel	
Max. medium temperature		-20 ... +200 °C				-20 ... +200 °C	
Contacts		max. 4 (max. 3 with filled devices)				max. 4 (max. 3 with filled devices)	
Vibration damper		without			with	without	
Indicating range bar		**Code of indicating range**					
-1 ... +3 bar		..A2	..A2	..A2	..A2	..A2	..A2
-1 ... +5 bar		..A3	..A3	..A3	..A3	..A3	..A3
-1 ... +9 bar		..A4	..A4	..A4	..A4	..A4	..A4
-1 ... +15 bar		..A5	..A5	..A5	..A5	..A5	..A5
0 ... 0,6 bar		..B1	..B1	..B1	..B1	..B1	..B1
0 ... 1 bar		..B2	..B2	..B2	..B2	..B2	..B2
0 ... 1,6 bar		..B3	..B3	..B3	..B3	..B3	..B3
0 ... 2,5 bar		..B4	..B4	..B4	..B4	..B4	..B4
0 ... 4 bar		..B5	..B5	..B5	..B5	..B5	..B5
0 ... 6 bar		..B6	..B6	..B6	..B6	..B6	..B6
0 ... 10 bar		..B7	..B7	..B7	..B7	..B7	..B7
0 ... 16 bar		..B8	..B8	..B8	..B8	..B8	..B8
0 ... 25 bar		..B9	..B9	..B9	..B9	..B9	..B9
0 ... 40 bar		..B0	..B0	..B0	..B0	..B0	..B0

The measuring ranges are calibrated at 20 °C as standard.

Options
(please specify in writing)

- Monting flange stainless steel 1.4301
- Housing with liquid filling
- Sealing collar height 18 mm, 44 mm or customer-specific instead of 6.5 mm
- Calibration to operating conditions according to customer specifications

Pressure Gauges with Membrane Diaphragm Seal for the Paper Industry Model MAN-RF...D

Dimensions

MAN-RF2CD

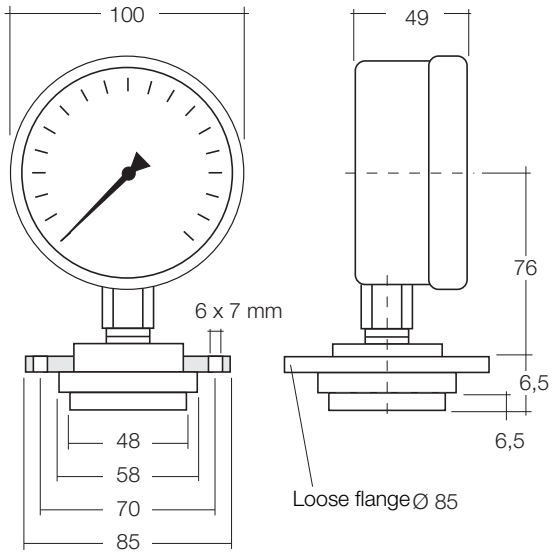

MAN-RF2DD

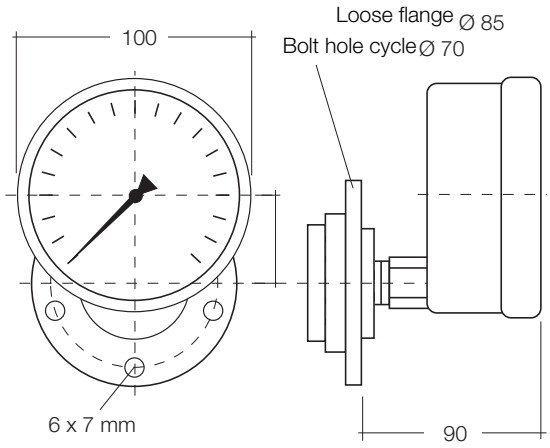

MAN-RF2ED

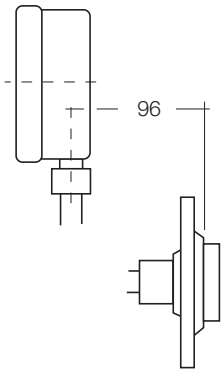

MAN-RF2FD

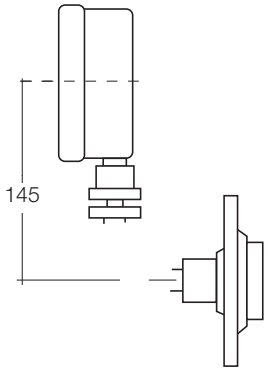

1/04-2014

M-Zert
Zertifiziertes QM-System
DIN EN ISO 9001
Zertifikat-Nr. 01017

All Stainless Steel Bourdon Tube Pressure Gauges

S3 acc. to EN 837-1 · for Exceptional Safety

KOBOLD

measuring • monitoring • analysing

MAN-R ... S

MAN-RF 26 S

MAN-RD 25 S

- Housing:
  63 mm, 100 mm, 160 mm
- Connection:
  G¼ (63 mm housing)
  G½ (100 mm, 160 mm housing)
- Material
  Housing: stainless steel
  Connection: stainless steel
- Measuring ranges:
  -1 ... 0 bar ... 0 ... +1000 bar
  (1600 bar with NG 160)
- Accuracy class:
  1.0 (1.6 with 63 mm)
- Options:
  damping liquid,
  contacts, transmitter

P1

KOBOLD companies worldwide:
ARGENTINA, AUSTRIA, BELGIUM, BULGARIA, CANADA, CHILE, CHINA, COLOMBIA, CZECHIA, DOMINICAN REPUBLIC, EGYPT, FRANCE, GERMANY, GREAT BRITAIN, HUNGARY, INDIA, INDONESIA, ITALY, MALAYSIA, MEXICO, NETHERLANDS, PERU, POLAND, ROMANIA, SINGAPORE, SOUTH KOREA, SPAIN, SWITZERLAND, TAIWAN, THAILAND, TUNISIA, TURKEY, USA, VIETNAM

KOBOLD Messring GmbH
Nordring 22-24
D-65719 Hofheim/Ts.
Head Office:
+49(0)6192 299-0
+49(0)6192 23398
info.de@kobold.com
www.kobold.com

All Stainless Steel Bourdon Tube Pressure Gauges S3 according to EN 837-1 for Exceptional Safety
Model MAN-R...S

Application

The KOBOLD all stainless steel pressure gauges for in creased safety according to EN 837-1 are ideal for the hard conditions and the resulting high demands on pressure measurement in production facilities in chemical industry and other comparable area's. Resistance to aggressive medias and environments is achieved by using high-graded materials such as stainless steel both for the movement and the housing. They can be used for liquid or gaseous substances which do not crystallize and are not highly viscous.

Safety execution

The safety execution of the pressure gauges comprises a burstproof solid front between dial and Bourdon tube, a laminated safety glass as well as a blow-out back (according EN 837-1). Glycerine-filled pressure gauges are equipped with a pres sure compensating diaphragm. This diaphragm prevents a pressure increase inside the housing due to volume expansion caused by the temperature increase of the glycerine fillingfluid, thus avoiding a wrong reading.

Measuring principle

Mechanical pressure measurement uses the principle of an elastic measuring element, which generates a precisely defined, reproducible deflection when subjected to pressure. The motion works convert this into a rotary motion of the pointer. The pressure at the measuring element can be read on the scale of the dial.

Unifilar drawing

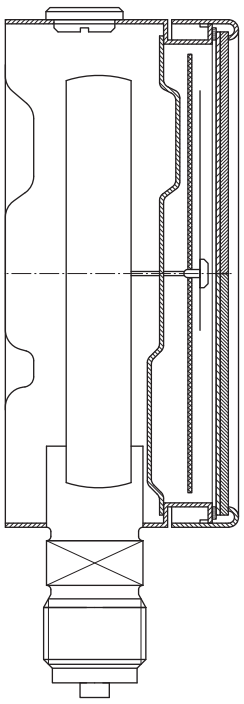

Housing

The following housing diameters are available:

63 mm, 100 mm and 160 mm. The housing material is stainless steel.

Installation

The gauges are most often installed straight into the customer's screw necks. Optional gauge models with an installation border on the front are also available for installation into or onto control panels.

Connection

The gauges with 63 housing diameter are supplied with a G¼ connecting thread as standard, gauges with housing diameter of 100 mm and above with G½ connecting thread. The connection is made of stainless steel. Diaphragm seals can be mounted for viscous, crystallising, aggressive materials or higher temperature materials to prevent the material being measured from penetrating into the measuring system. Other connection types are available on request.

Measuring ranges

The measuring ranges are graduated according to DIN recommendations and lie between -1 ... 0 bar and 0 ... 1600 bar. Other scales with measuring ranges in PSI, Pa or with your company logo are available on request

Damping liquid

Pressure gauges with liquid filling are used in locations with high alternating dynamic loads, strong vibrations and pulses. The filling ensures easy readability through steady pointer movement even when subjected to extreme loading and heavy vibration. The lubricating effect of the glycerine also keeps wear to a minimum. Glycerine is always used as a matter of principle. In gauges with a contact or an electrical measuring transducer, liquid paraffin is used as a non-conductive alternative. Silicon fillings of various viscosities are also optionally available.

Contacts

For monitoring the system pressure, gauges with 100 mm or 160 mm diameter can be fitted with up to four limit contacts. Slow action, magnetic spring, inductive and pneumatic contacts are also available (see Chapter »Contact Fittings for Pressure Gauges«).

Fields of application

- Chemical and petrochemical industries
- Plastics and paper-manufacturing industries
- Food and beverage industries
- Machine and plant construction

All Stainless Steel Bourdon Tube Pressure Gauges S3 according to EN 837-1 for Exceptional Safety
Model MAN-R...S

Technical Details

Connection / Housing	NG 63		NG 100		NG 160	
	Model					
Bottom connection  MAN-...	...RD25S...	...RD75S...	...RF26S...	...RF76S...	...RG26S...	...RG76S...
Accuracy class	1,6		1,0			
Housing version	stainless steel 1.4301					
Filling	-	glycerine*	-	glycerine*	-	glycerine*
Ring	stainless steel 1.4301					
Pointer	aluminium, black anodized					
Movement	stainless steel 1.4571					
Throttle D=	from 60 bar D = 0.5 mm					
Window	polyamide		safety glass			
Measuring element	stainless steel 1.4571					
Protection	IP 65	IP 67	IP 65	IP 67	IP 65	IP 67
Overrange protection	none		short time 1.3 times (from 1000 bar 1,1 times) of full scale			
Weight (without contacts)	0.2 kg	0.28 kg	1. kg	1.2 kg	1.6 kg	3.6 kg
Ambient temperature	-20 ... +80 °C	-20 ... +60 °C	-20 ... +80 °C	-20 ... +60 °C	-20 ... +80 °C	-20 ... +60 °C
Connection	stainless steel 1.4571					
Thread connection	G ¼ male		G ½ male			
Max. temperature of medium	80 °C					
Contacts (inductive only)	no		max. 3 contacts (inductive only)			
Indicating range	**Code of indicating range**					
-0.6 ... 0 bar	-	-	..AC	..AC	..AC	..AC
-1 ... 0 bar	..AD	..AD	..AD	..AD	..AD	..AD
-1 ... +0.6 bar	..A0	..A0	..A0	..A0	..A0	..A0
-1 ... +1.5 bar	..A1	..A1	..A1	..A1	..A1	..A1
-1 ... +3 bar	..A2	..A2	..A2	..A2	..A2	..A2
-1 ... +5 bar	..A3	..A3	..A3	..A3	..A3	..A3
-1 ... +9 bar	..A4	..A4	..A4	..A4	..A4	..A4
-1 ... +15 bar	..A5	..A5	..A5	..A5	..A5	..A5
0 ... 0.6 bar	-	-	..B1	..B1	..B1	..B1
0 ... 1 bar	..B2	..B2	..B2	..B2	..B2	..B2
0 ... 1.6 bar	..B3	..B3	..B3	..B3	..B3	..B3
0 ... 2.5 bar	..B4	..B4	..B4	..B4	..B4	..B4
0 ... 4 bar	..B5	..B5	..B5	..B5	..B5	..B5
0 ... 6 bar	..B6	..B6	..B6	..B6	..B6	..B6
0 ... 10 bar	..B7	..B7	..B7	..B7	..B7	..B7
0 ... 16 bar	..B8	..B8	..B8	..B8	..B8	..B8
0 ... 25 bar	..B9	..B9	..B9	..B9	..B9	..B9
0 ... 40 bar	..B0	..B0	..B0	..B0	..B0	..B0
0 ... 60 bar	..C1	..C1	..C1	..C1	..C1	..C1
0 ... 100 bar	..C2	..C2	..C2	..C2	..C2	..C2
0 ... 160 bar	..C3	..C3	..C3	..C3	..C3	..C3
0 ... 250 bar	..C4	..C4	..C4	..C4	..C4	..C4
0 ... 400 bar	..C5	..C5	..C5	..C5	..C5	..C5
0 ... 600 bar	..C6	..C6	..C6	..C6	..C6	..C6
0 ... 1000 bar	..D7	..D7	..D7	..D7	..D7	..D7
0 ... 1600 bar	-	-	-	-	..D8	..D8

* Special filling: Paraffin oil for higher temperatures (on request) or with contacts

All Stainless Steel Bourdon Tube Pressure Gauges S3 according to EN 837-1 for Exceptional Safety
Model MAN-R...S

Dimensions

Code	NG	A	B without contact	B 1 or 2 contacts	B 3 contacts	C	d	D	E	AF	W	X
MAN-RD 25/75 S	63 mm	6	31	-	-	13	62	68	55	14	-	-
MAN-RF 26/76 S	100 mm	17	48	82	97	15	100	101	86.5	22	0	88
MAN-RG 26/76 S	160 mm	21	50	101	120	15	159	162	117	22	0	118

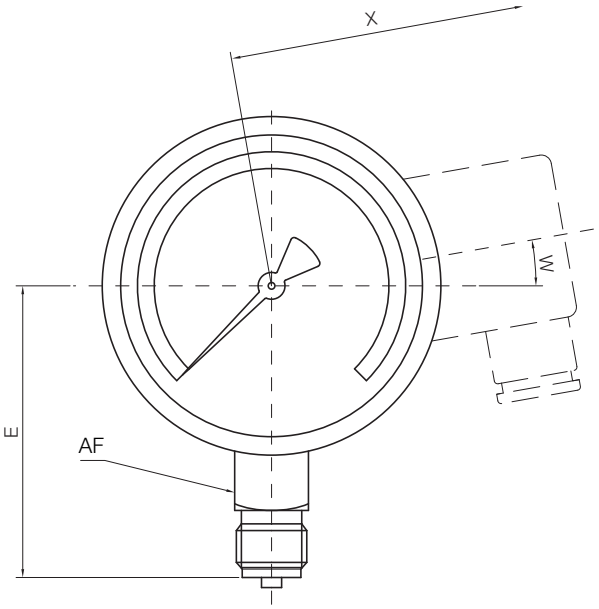

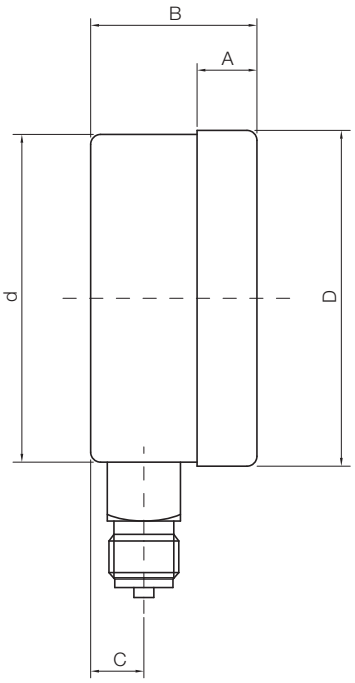

Zertifiziertes QM-System
DIN EN ISO 9001
Zertifikat-Nr. 01017

Bourdon Tube Pressure Gauges

for the Refrigeration

measuring • monitoring • analysing

MAN-T

MAN-TE

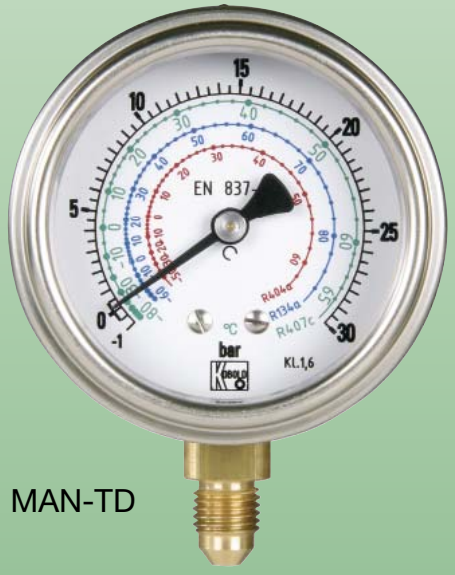

MAN-TD

- Housing:
  63 mm, 80 mm, 100 mm
- Connection:
  G¼, 7/16-20 UNF
- Material:
  Housing: steel, black painted
  stainless steel
  Connection: brass, stainless steel
- Measuring ranges:
  -1 ... +9 bar ... -1 ... +40 bar
- Scale: pressure and temperature
- Options:
  Liquid filling,
  overrange protection, contacts,
  special housing designs

P1

KOBOLD Messring GmbH
Nordring 22-24
D-65719 Hofheim/Ts.
Head Office:
+49(0)6192 299-0
+49(0)6192 23398
info.de@kobold.com
www.kobold.com

Application

Bourdon tube pressure gauges used in refrigeration are used for the simultaneous measurement of vapour pressure and the associated vapour temperature. The gauges can be built with up to 3 temperature scales for use with various cooling agents. They can be provided for the most popular inorganic and organic cooling agents. The stability of the material the pressure gauge is made of must also be taken into consideration. All the pressure gauges comply with general internatio- nal guidelines and take account of standard as well as application-specific requirements. They are the result of the over 70 years experience we have in building pressure gauges.

Measuring principle

Mechanical pressure measurement uses the principle of an elastic measuring element, which generates a precisely defined, reproducible deflection when subjected to pressure. The motion works convert this into a rotary motion of the pointer. The pressure at the measuring element can be read on the scale of the dial.

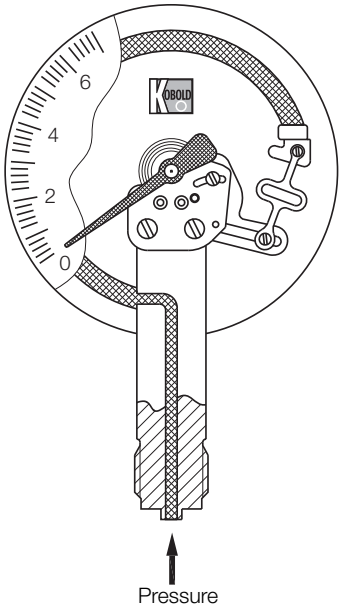

Temperature scale

There is a direct relationship between pressure and temperature. This is why the pressure gauges can be fitted with a double scale for the measured pressure and the calculated temperature. The temperature scales are based on the vapour tables of saturated cooling agents with a reference pressure of 1013.25 mbar. They are only valid for the pure cooling agent stated on the scale. Since in practice the cooling agents are rarely chemically pure, and because the system pressure usually deviates from the reference pressure, only an approximate temperature can be shown. This is usually quite sufficient in practice.

Housing

The following housing diameters are available:

63, 80, 100 mm. The housing material is black steel or stainless steel.

Installation

It can be installed on the delivery side or on the intake side. The gauges are usually installed directly into the customer's threaded connection. For integration into or onto control panels there are options available with an installation profile front or back or a triangular front ring with mounting bracket.

Connection

Gauges for use with organic cooling agents are supplied with a brass 7/16-20 UNF connection as standard. Stainless steel connectors with G¼ or G½ thread connections are available for use with inorganic cooling agents.

Measuring range

The measuring ranges stated in the technical data have proven to be the most used values. A particular special feature of cooling pressure gauges is that the scale is a combined pressure and temperature scale. The standard scale shows bar and °C. It is also possible to have other scales for temperatures in °F or for pressure in kPa/MPa or PSI. Special scales with your own company logo are also available on request.

Damping liquid

Pressure gauges with liquid filling are used in locations with high alternating dynamic loads, strong vibrations and pulses. The filling ensures easy readability through steady pointer movement even when subjected to extreme loading and heavy vibration. The lubricating effect of the glycerine also keeps wear to a minimum. Glycerine is always used as a matter of principle.

Contacts

Liquid paraffin is used as a non-conductive alternative for gauges with contacts or electrical transmitters. Silicon fillings of various viscosities are also optionally available.

Fields of application

- Refrigeration and cooling systems

Bourdon Tube Pressure Gauges for the Refrigeration Model MAN-T

Technical Details

		for organic refrigeration						for inorganic refrigeration	
Connection/housing		**NG 63**		**NG 80**		**NG 100**		**NG 63**	
Bottom connection	**MAN-...**	**..TD2V..**	**..TD7V..**	**..TE1V..**	**..TE5V..**	**..TF2V..**	**..TF7V..**	**..TD25..**	**..TD75..**
Back connection	**MAN-...**	**..TD2W..** centrical	**..TD7W..** centrical	**..TE1W..** eccentrical	**..TE5W..** eccentrical	**..TF2W..** eccentrical	**..TF7W..** eccentrical	**..TD27..** eccentrical	**..TD77..** eccentrical
Triangular front ring and mounting bracket Back connection	**MAN-...**	**..TD2WK..** centrical	-	**..TE1WK..** eccentrical	-	**..TF2WK..** eccentrical	-	**..TD27K..** eccentrical	-
Front flange Back connection	**MAN-...**	**..TD2WV..** centrical	-	**..TE1WV..** eccentrical	-	**..TF2WV..** eccentrical	-	**..TD27V..** eccentrical	-
Installation profile back Bottom connection	**MAN-...**	**..TD2VR..** centrical	-	**..TE1VR..** eccentrical	-	**..TF2VR..** eccentrical	-	**..TD25R..** eccentrical	-
Accuracy class		1,6		1,0		1,0		1,6	
Housing version		stainless steel		steel black				stainless steel	
Filling		-	glycerine	-	glycerine	-	glycerine	-	glycerine
Ring		VA rolled		rubber		VA bayonet		VA rolled	
Pointer		Alu							
Movement		brass						stainless steel	
Throttle D=		none							
Window		instrument glass							
Measuring element		CuZn						stainless steel	
Protection		IP 65	IP 68	IP 65	IP 68	IP 65	IP 68	IP 65	IP 68
Overrange protection		1,0							
Weight (without contact)		on request							
Ambient temperature		-20 ... +60 °C							
Connection		brass						stainless steel	
Thread connection		7/16-20 UNF						G ¼ male	
Max. medium temperature		depending on measuring range							
Contacts		none				3-times		none	
Indicating range, single scale		**Code of indicating range**							
-1 ... +9 bar		..A4..		..A4..		..A4..		-	
- 1 ... +12.5 bar		..AT..		..AT..		..AT..		..AT..	
-1 ... +15 bar		..A5..		..A5..		..A5..		-	
-1 ... +24 bar		..A6..		..A6..		..A6..		..A6..	
-1 ... +40 bar		..AU..		..AU..		..AU..		-	
Indicating range, double scale/ triple scale		**Code of indicating range**							
-1 ... +9 bar		..A4..		..A4..		..A4..		-	
- 1 ... +12.5 bar		..AT..		..AT..		..AT..		-	
-1 ... +24 bar		..A6..		..A6..		..A6..		-	
Refrigerant medium		**Code of refrigerant medium**							
Simple scale (pressure and temperature)	R12	..A		..A		..A		-	
	R 22	..B		..B		..B		-	
	R 23	..C		..C		..C		-	
	R 134a	..D		..D		..D		-	
	R 290	..E		..E		..E		-	
	R 404a	..F		..F		..F		-	
	R 407a	..G		..G		..G		-	
	R 407c	..H		..H		..H		-	
	R 410a	..I		..I		..I		-	
	R 502	..J		..J		..J		-	
	R 507	..K		..K		..K		-	
	R 600	..L		..L		..L		-	
	R 600a	..M		..M		..M		-	
	R 717 (NH3)							..N	
	special scale	..X		..X		..X		-	
Double scale (pressure and 2x temperature)	R 134a + R 404a	..O		..O		..O		-	
	R 404a + R 407c	..P		..P		..P		-	
	R 404a + R 507	..Q		..Q		..Q		-	
	R 134a + R 22	..R		..R		..R		-	
	special scale	..Y		..Y		..Y		-	
Triple scale (pressure and 3x temperature)	R22+R12+R502	..S		..S		..S		-	
	R22+R407a+R407c	..T		..T		..T		-	
	R134a+R407c+R507	..U		..U		..U		-	
	special scale	..Z		..Z		..Z		-	

Bourdon Tube Pressure Gauges for the Refrigeration Model MAN-T

Dimensions

Bottom connection

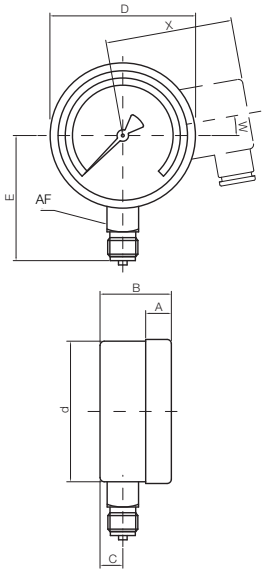

Back connection

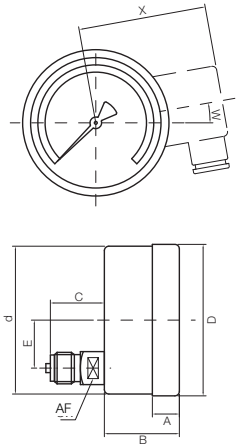

Triangular front ring

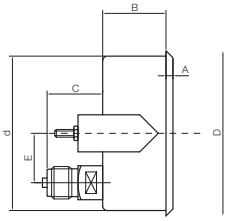

Front flange

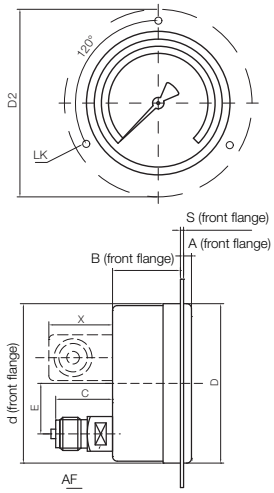

Bottom connection

Code	NG	A	B without contact	B 1 or 2 contacts	B 3 contacts	C	d	D	E	AF
MAN-TD 2V/7V/25/75	63 mm	6	31	-	-	13	62	68	55	14
MAN-TE 1V/5V	80 mm	5	43.5	-	-	16	80	84	76	11
MAN-TF 2V/7V	100 mm	17	48	82	97	15	100	101	86.5	22

Back connection

Code	NG	A	B without contact	B 1 or 2 contacts	B 3 contacts	C	d	D	E	AF
MAN-TD 2W/7W/27/77	63 mm	6	31	-	-	26	63	68	0	14
MAN-TE 1W/5W	80 mm	5	43.5	-	-	35	80	84	23	11
MAN-TF 2W/7W	100 mm	17	49	82	97	36	100	101	23.5	22

Triangular front ring with clamp

Code	NG	A	B without contact	B 1 or 2 contacts	B 3 contacts	C	d	D	E	AF
MAN-TD 2W/27 K	63 mm	6	26	-	-	26	62	68	0	14
MAN-TE 1W K	80 mm	5	43.5	-	-	35	80	84	23	11
MAN-TF 2W K	100 mm	5	41	88	105	36	101	107	23.5	22

Front ring

Code	NG	A	B without contact	B 1 or 2 contacts	B 3 contacts	C	d	D	D2	E	LK	S	AF
MAN-TD 2W/27 V	63 mm	7	24	-	-	26	62	68	85	0	75	1	14
MAN-TE 1W V	80 mm	-	-	-	-	-	-	-	-	-	-	-	-
MAN-TF 2W V	100 mm	6	43	86	92	36	104	101	132	23.5	116	2	22

1/04-2014

M-Zert
Zertifiziertes QM-System
DIN EN ISO 9001
Zertifikat-Nr. 01017

Differential Pressure Gauges

for high static pressures up to 200 bar

KOBOLD

measuring • monitoring • analysing

MAN-U

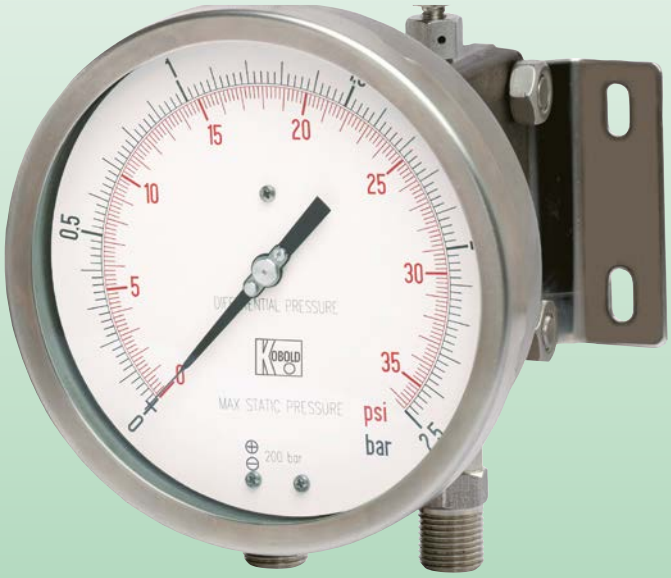

- Housing: 100 mm, 150 mm
- Material
  Housing: Stainless steel
  Connection: Stainless steel
- Movement:
  Stainless steel
- Measuring range:
  0 ... 0.1 bar up to 0 ... 25 bar
- Options:
  Damping liquid, contacts

P1

KOBOLD companies worldwide:
ARGENTINA, AUSTRIA, BELGIUM, BULGARIA, CANADA, CHILE, CHINA, COLOMBIA, CZECHIA, DOMINICAN REPUBLIC, EGYPT, FRANCE, GERMANY, GREAT BRITAIN, HUNGARY, INDIA, INDONESIA, ITALY, MALAYSIA, MEXICO, NETHERLANDS, PERU, POLAND, ROMANIA, SINGAPORE, SOUTH KOREA, SPAIN, SWITZERLAND, TAIWAN, THAILAND, TUNISIA, TURKEY, USA, VIETNAM

KOBOLD Messring GmbH
Nordring 22-24
D-65719 Hofheim/Ts.
Head Office:
+49(0)6192 299-0
+49(0)6192 23398
info.de@kobold.com
www.kobold.com

1/12-2013

Description

These instruments model MAN-U are used to check filter obstructions,pressure drops, flow rate differences, level, measurements and generally the difference between two pressures of equal or different circuits. The measuring element is formed by two diaphragms, acting on the same movement. In this way the pointer senses only the difference between the two pressures corresponding respectively to upstream and downstream pressure of the circuit.

Technical Data

Accuracy class:	1.6 acc. to EN 837
Scale amplitude:	180°...270°, depending on the scale range
Static pressure:	25...200 bar, depending on the scale range
Ambient temperature:	-25...+65 °C
Process fluid temperature:	Max. 150 °C
Thermal drift:	±0.8% every ±10 °C of ambient temperature
Protection:	IP55 acc. to IEC529
Process connection:	AISI 316L stainless steel
Elastic element:	AISI 316L fluid-damped stainless steel double diaphragm for pressure ranges <250 mbar (AISI 316L stainless steel/Duratherm double diaphragm for pressure ranges ≥250 mbar)
Gasket:	FPM und PFTE
Case:	AISI 304 stainless steel
Ring:	AISI 304 stainless steel polished, bayonet lock
Window:	Tempered glass
Movement:	Stainless steel
Dial:	Aluminium, white with black markings
Pointer:	Aluminium, micrometric adjustable, black

Operating Principle

The double diaphragm measuring cell is characterized by a system of limitstops that closes and blocks the passage, obtaining in this way a liquid bed on which the measuring element stops. The linear shifting of the diaphragms is transformed, by leverages, in circular shifting and transmitted by the movement to the pointer.

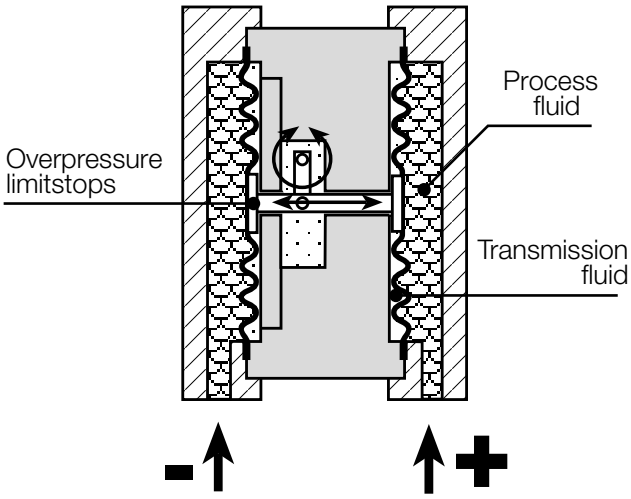

1/12-2013

Ranges

Code	mbar	mmH_2O	bar*	kPa	MPa	Static pressure one side	Static pressure both side	Scale amplitude
F2	0...100	0...1000		0...10		25 bar	100 bar	180°
F3	0...160	0...1600		0...16		25 bar	100 bar	180°
F4	0...250	0...2500		0...25		100 bar	200 bar	180°/270° **
F5	0...400	0...4000		0...40		200 bar	200 bar	180°/270° **
F6	0...600	0...6000	0...0.6	0...60		200 bar	200 bar	270°
FA	0...1000	0...10 000	0...1	0...100		200 bar	200 bar	270°
FB	0...1600		0...1.6	0...160		200 bar	200 bar	270°
B4			0...2.5	0...250		200 bar	200 bar	270°
B5			0...4	0...400		200 bar	200 bar	270°
B6			0...6	0...600		200 bar	200 bar	270°
B7			0...10	0...1000	0...1	200 bar	200 bar	270°
B8			0...16	0...1600	0...1.6	200 bar	200 bar	270°
B9			0...25	0...2500	0...2.5	200 bar	200 bar	270°

* available also M.U.: kg/cmq; bar/psi; bar/kPa; bar/MPa against add-on price
** with DS 100

Order Details (Example: **MAN-U FC R F2 000**)

Model	Housing size (DS) / connection type	Connection	Range	Options
MAN-U ...	... **FC** ... = ø 100, VA, back flange ... **HC** ... = ø 150, VA, back flange ... **FE** ... = ø 100, VA, front flange ... **HE** ... = ø 150, VA, front flange	... **R** ... = ¼" NPT female, bottom ... **S** ... = ½" NPT male, bottom ... **6** ... = ½" BSP male, bottom	... **F2** ... = 0 ... 100 mbar ... **F3** ... = 0 ... 160 mbar ... **F4** ... = 0 ... 250 mbar ... **F5** ... = 0 ... 400 mbar ... **F6** ... = 0 ... 600 mbar ... **FA** ... = 0 ... 1000 mbar ... **FB** ... = 0 ... 1600 mbar ... **B4** ... = 0 ... 2.5 bar ... **B5** ... = 0 ... 4 bar ... **B6** ... = 0 ... 6 bar ... **B7** ... = 0 ... 10 bar ... **B8** ... = 0 ... 16 bar ... **B9** ... = 0 ... 25 bar ... **EY** ... = single scale as per data sheet without add-on price (see above) ... **DY** ... = dual scale as per data sheet against add-on price (see above)	... **000** = no options ... **other options** = see options table

Options

Description	Code	Housing size [mm]	Notes
Inductive and mechanical electric contacts	-	150	Codes, descriptions and wiring in separate data sheet
AISI 316 stainless steel case and ring	**C40**	100/150	
MONEL 400 diaphragm and process connections	**D10**	100/150	Accuracy 2.5 as per EN 837. for pressure ranges < 400 mbar
NACE MR 01.75 version	**E30**	100/150	To be ordered with MONEL 400 diaphragm (code M23)
Protection IP 65	**E65**	100/150	
Maximum pointer IP 65	**L22**	100/150	To be ordered with Plexiglas window (code T31)
MONEL 400 diaphragms	**M23**	100/150	Accuracy 2.5 as per EN 837. for pressure ranges < 400 mbar
Oil-free and degreased, oxygen service	**P02**	100/150	Filling of internal chamber with Fluorolube
Case glycerine filling, IP 67 (ambient temperature +15 ... +65 °C)	**R10**	100/150	
Silicone glycerine filling, IP 67 (ambient temperature -40 ... +65 °C)	**R11**	100/150	Window gasket and blow out vent: FPM
2" pipe mounting bracket	**S31**	100/150	For connection type C only
Tropicalisation	**T01**	100/150	
Stainless steel label	**T25**	100/150	
Plexiglas window	**T31**	100/150	
Safety glass window	**T32**	100/150	

Options for Remote Mounting, with Diaphragm Seal

Description	Code	Housing size [mm]	Notes
2 diaphragm seals mounting*	**ADD**	100/150	With diaphragms > Ø 63 mm only
Stainless steel capillary, covered with st.st. armour 1 m	**CP1**	100/150	
Stainless steel capillary, covered with st.st. armour 2 m	**CP2**	100/150	
Stainless steel capillary, covered with st.st. armour 3 m	**CP3**	100/150	
Stainless steel capillary, covered with st.st. armour 4 m	**CP4**	100/150	For pressure ranges ≥ 0 ... 250 mbar
Stainless steel capillary, covered with st.st. armour 5 m	**CP5**	100/150	For pressure ranges ≥ 0 ... 250 mbar
Stainless steel capillary, covered with st.st. armour 6 m	**CP6**	100/150	For pressure ranges ≥ 0 ... 400 mbar

* for pressure ranges < 250 mbar call our sales team

1/12-2013

Dimensions [mm]

Model MAN-UFC

Surface mounting, back flange, lower connections

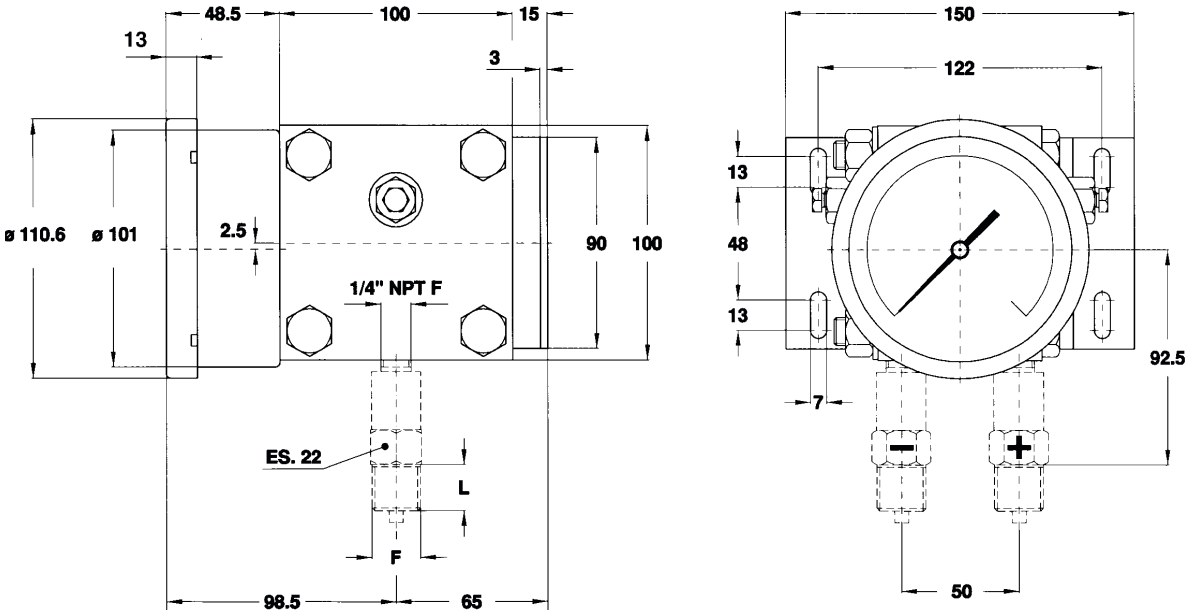

Model MAN-UFE

Panel mounting, front flange, lower connections

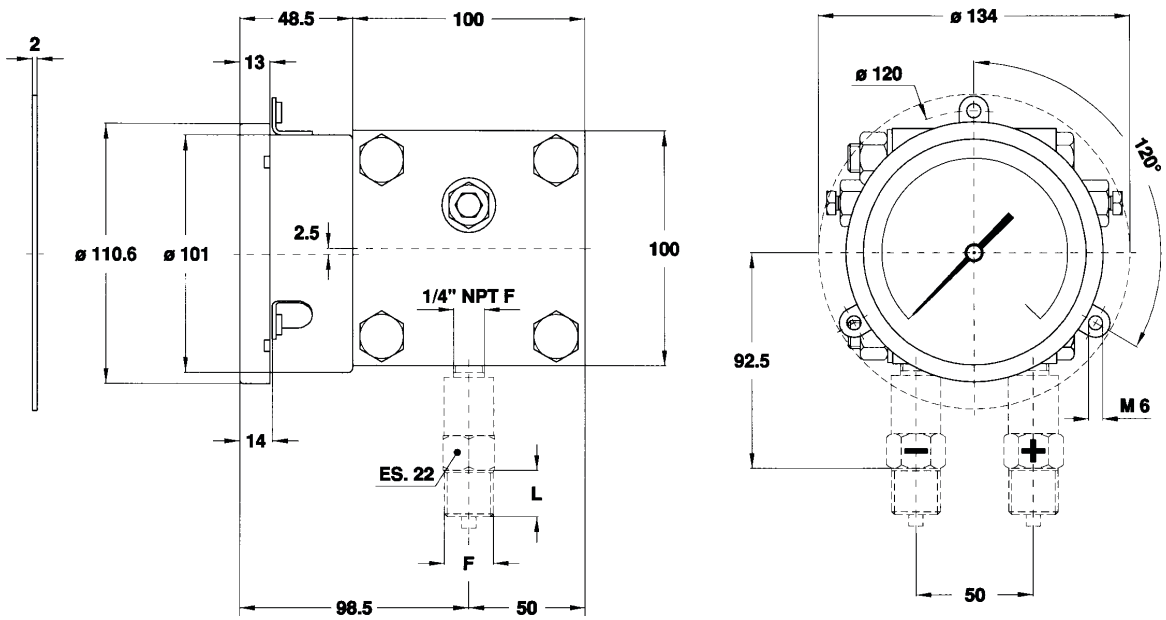

Model MAN-UHC

Surface mounting, back flange, lower connections

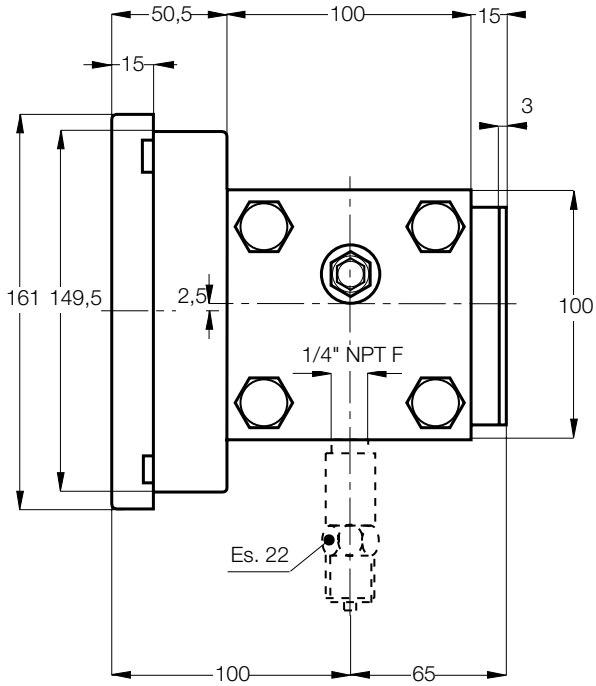

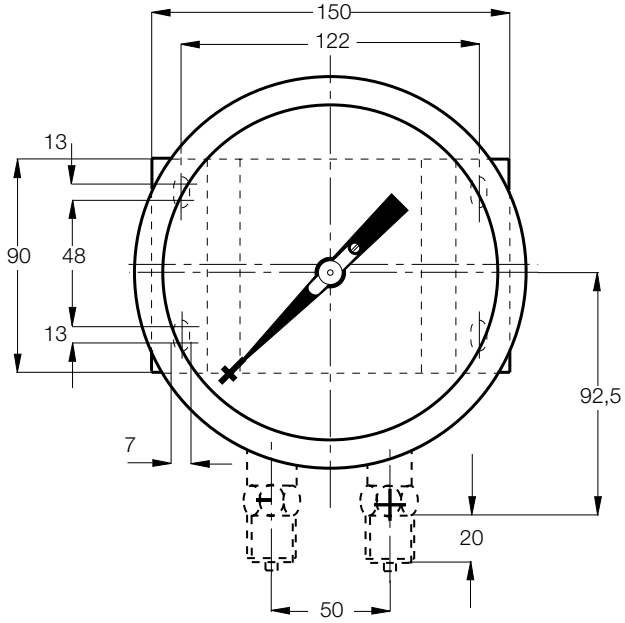

Model MAN-UHE

Panel mounting, front flange, lower connections

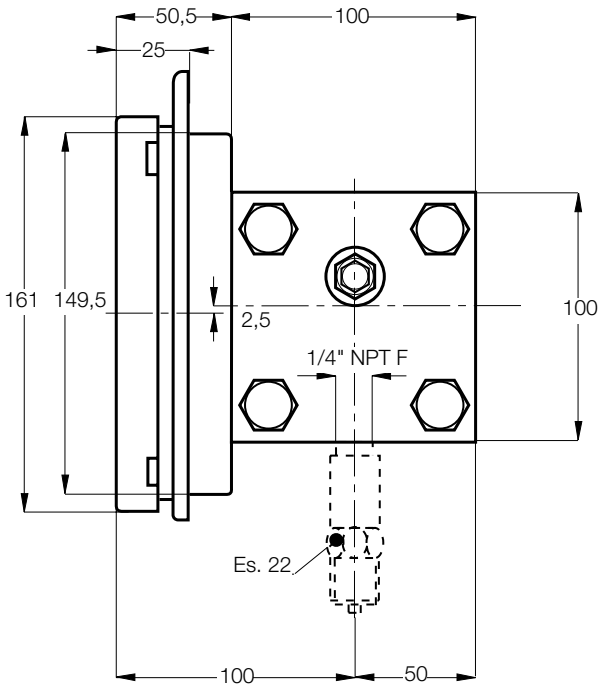

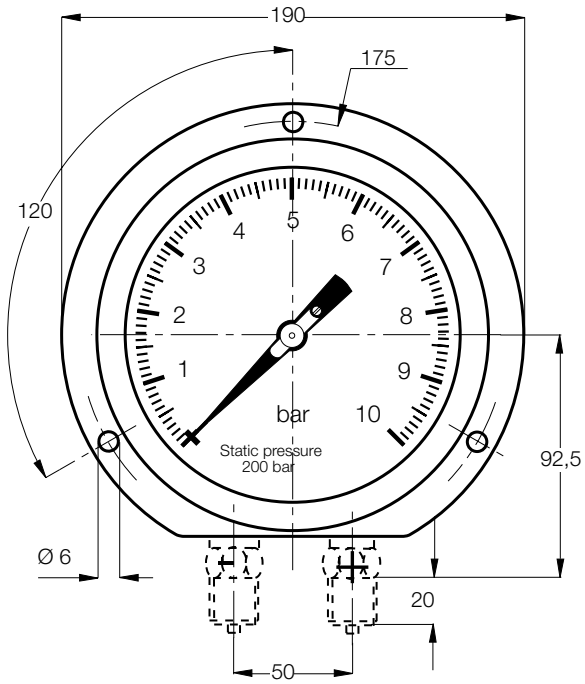

1/12-2013

Zertifiziertes QM-System
DIN EN ISO 9001
Zertifikat-Nr. 01017

Pressure Transducer with Local Indication

and Analogue Output

measuring • monitoring • analysing

MAN-ZF

- Housing: 100 mm
- Connection: G½
- Material: stainless steel
- Measuring ranges:
  -1 ... 0 bar ... 0 ... +600 bar
- Analogue output: 4 ... 20 mA
- Options:
  Liquid filling
  Transmitter
- Applications:
  Chemical industry
  Food industry
  Mechanical engineering
  Plant construction

P1

KOBOLD companies worldwide:
ARGENTINA, AUSTRIA, BELGIUM, BULGARIA, CANADA, CHILE, CHINA, COLOMBIA, CZECHIA, DOMINICAN REPUBLIC, EGYPT, FRANCE, GERMANY, GREAT BRITAIN, HUNGARY, INDIA, INDONESIA, ITALY, MALAYSIA, MEXICO, NETHERLANDS, PERU, POLAND, ROMANIA, SINGAPORE, SOUTH KOREA, SPAIN, SWITZERLAND, TAIWAN, THAILAND, TUNISIA, TURKEY, USA, VIETNAM

KOBOLD Messring GmbH
Nordring 22-24
D-65719 Hofheim/Ts.
Head Office:
+49(0)6192 299-0
+49(0)6192 23398
info.de@kobold.com
www.kobold.com

Pressure Transducer with Local Indication and Analogue Output Model MAN-ZF

Application

The KOBOLD all stainless steel pressure transducer are suitable for harsh conditions resulting from high demands on pressure measurement in production plants of the chemical or other comparable industries. By using high quality stainless steel for both measuring system and housing guarantees resistance against aggressive media and environment. They can be used for liquid or gaseous substances which do not crystallize and which are not highly viscous.
All the pressure gauges comply with general international guidelines and take account of standard as well as application-specific requirements.

Mechanical and electronic pressure measurement

Mechanical pressure measurement uses the principle of an elastic measuring element, which generates a precisely defined, reproducible deflection when subjected to pressure. The motion works convert this into a rotary motion of the pointer. The pressure at the measuring element can be read on the scale of the dial. In addition to the mechanical pressure measurement, there is also an electronic measuring cell built into the housing. This converts the measured pressure into an analogue signal of 4 ... 20 mA.

Housing, installation and connection

The stainless steel housing has a diameter of 100 mm. The gauges are most often installed straight into the costumer's screw necks. For pressure gauges to be built into or onto control panels there are also variations with a mounting strip front or back. Gauges are supplied with a G½ connecting thread as standard.
Diaphragm seals can be mounted for viscous, crystallising, aggressive materials or higher temperature materials to prevent the material being measured from penetrating into the measuring system. Other types of connection are available on request.

Measuring ranges and damping liquid

The measuring ranges are graduated according to DIN recommendations and lie between -1 ... 0 bar and 0 ... 600 bar. Other scales with measuring ranges in PSI, Pa or with your company logo are available on request.
Pressure gauges with liquid filling are used in locations with high alternating dynamic loads, strong vibrations and pulses. The filling ensures easy readability through steady pointer movement even when subjected to extreme loading and heavy vibration. The lubricating effect of the glycerine also keeps wear to a minimum. Glycerine is always used as a matter of principle. Silicon fillings of various viscosities are also optionally available.

Technical Data

Connection/Housing	Model: NG 100	
	MAN-ZF26...	MAN-ZF76...
Accuracy class	1.0	
Housing version	stainless steel 1.4301	
Filling	-	Paraffin oil
Ring	stainless steel 1.4301	
Pointer	Aluminium, black anodized	
Movement	stainless steel	
Throttle	from 60 bar D = 0.5 mm	
Window	safety glass	
Measuring element	stainless steel 1.4571	
Protection	IP 65	IP 67
Overrange protection	Rest load 1 times, working load 0.9 times	
Weight	0.7 kg	1.0 kg
Ambient temperature	-20 ... +60 °C	
Connection	stainless steel 1.4571	
Thread connection	G½ male	
Max. medium temp.	60 °C	
Supply	13 - 30 V_{DC}	
Output	4 ... 20 mA, 2-wire	
Contact	on request	

Indicating range	Code of indicating range	
-1 ... 0 bar	AD A4	AD A4
-1 ... 0.6 bar	A0 A4	A0 A4
-1 ... +1.5 bar	A1 A4	A1 A4
-1 ... +3 bar	A2 A4	A2 A4
-1 ... +5 bar	A3 A4	A3 A4
-1 ... +9 bar	A4 A4	A4 A4
-1 ... +15 bar	A5 A4	A5 A4
0 ... 0.6 bar	B1 A4	B1 A4
0 ... 1 bar	B2 A4	B2 A4
0 ... 1.6 bar	B3 A4	B3 A4
0 ... 2.5 bar	B4 A4	B4 A4
0 ... 4 bar	B5 A4	B5 A4
0 ... 6 bar	B6 A4	B6 A4
0 ... 10 bar	B7 A4	B7 A4
0 ... 16 bar	B8 A4	B8 A4
0 ... 25 bar	B9 A4	B9 A4
0 ... 40 bar	B0 A4	B0 A4
0 ... 60 bar	C1 A4	C1 A4
0 ... 100 bar	C2 A4	C2 A4
0 ... 160 bar	C3 A4	C3 A4
0 ... 250 bar	C4 A4	C4 A4
0 ... 400 bar	C5 A4	C5 A4
0 ... 600 bar	C6 A4	C6 A4

Dimensions

Mounting (without flange), electrical connection lateral

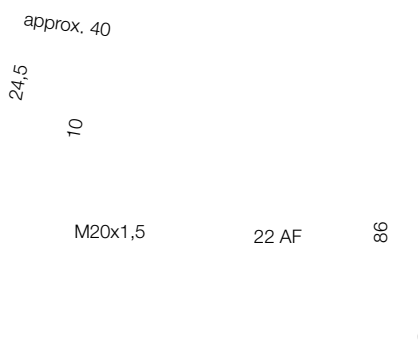

1/04-2014

M-Zert
Zertifiziertes QM-System
DIN EN ISO 9001
Zertifikat-Nr. 01017

Diaphragm Seals for Pressure Gauges

KOBOLD

measuring • monitoring • analysing

DRM

- Measuring ranges: 0 ...1 bar to 0 ...1600 bar
- t_{max}: 350 °C
- Protection of the measuring device against aggressive, highly viscous, solidifying or crystallizing media
- Transmission lines enable high temperatures of the media to be measured
- Protection of the measuring device against vibrations by use of capillary tube
- Cavity free measuring points for special hygienic conditions
- Damping of pressure changes and pressure peaks

P1

KOBOLD Messring GmbH
Nordring 22-24
D-65719 Hofheim/Ts.
Head Office:
+49(0)6192 299-0
+49(0)6192 23398
info.de@kobold.com
www.kobold.com

Description

Diaphragm seals are partitions for pressure gauges that prevent the material being measured penetrating the measuring system. For measuring pressure in the food industry the use of diaphragm seals are mostly indispensable. With the rMht choice of diaphragm seal systems it is possible to solve measuring problems that can often not be overcome with the pressure gauge alone.

Application

KOBOLD membrane diaphragm seals are used when the pressure gauge cannot stand up to the requirements of the measuring position. Diaphragm seals transmit the pressure to be measured over that of the transmission fluid that is separated from the medium to be measured by means of the membrane. The transmitted pressure affects the pressure gauge, pressure switch or pressure sensor. The diaphragm seals can be connected to the pressure gauge either directly or indirectly using a transmission line. Diaphragm seal and pressure gauge are joined together at the works to create one unit. Assembly and adjustment are carried out with extreme precision and years of experience.

Areas of application:

- Media enriched with solids
- Crystallising measured medium
- Polymerising measured medium
- HMh viscosity measured medium
- Corrosive measured medium
- Toxic and environmentally hazardous measured medium
- Very low measured medium temperature
- Very high measured medium temperature
- Hygienic requirements for the food and pharmaceutical sector
- Batch changing without product residues in the measuring system

Construction Type

We mainly manufacture diaphragm seals with every conceivable connecting system. Tongue and Bourdon diaphragm seals fill the gaps to cover all the requirements of the measuring point. KOBOLD diaphragm seals cover every type of assembly, whether with internal or external screw thread, or with coupling rings, clamp or flange mounting. Our tongued diaphragm seals are used when the measuring point only provides a very restricted space.

Our Bourdon diaphragm seals measure the pressure within the pipe through which the measured medium flows. The type of construction means that the diaphragm seal can be kept very sterile. We are constantly developing new diaphragm seals and improving our existing models.

Characteristics

A diaphragm seal barely influences the characteristics of a pressure gauge. The following items do influence them:

Fill and work volumes

The diaphragm seals only contain the minimum amount of pressure transmission fluid required for temperature and pressure. This volume covers what is needed for the pressure gauge, the compressibility and the thermal expansion.

Membrane

The membranes used are optimally coordinated with the corresponding diaphragm seals.

Transmission line

Reduced volume transmission lines are used to keep the influence on the measuring system as small as possible. Transmission lines are however indispensable for high measured media temperatures, pressure or system pulsation or for unfavourably positioned measuring points.

Pressure transmission fluid

The pressure transmission fluid transmits the pressure from diaphragm seal to pressure gauge. There are various fluids that can be used, depending on the operational conditions. All these fluids fulfil the requirement for minimum compressibility and lowest thermal expansion. Glycerine (up to +80 °C) and liquid paraffin (from -10 to +120 °C) are used as siliconefree fluids. Silicone oils are available for temperature ranges from -40 to +200 °C, -20 to +350 °C and -20 to +400 °C. For special applications we can also fill the gauges with MF 7 (Hg, -20 to +350 °C).

In the choice of fluid not all factors can be taken into consideration because, depending on the application, other requirements have to be met, such as food safety specs or that they must be absolutely siliconefree. Our process technicians can choose the best pressure transmission fluid for the requirements.

Operating conditions

Since the proper pressure indication depends on the temperature of the fill fluid the pressure gauge with diaphragm seals can be adjusted for the operating conditions. To keep these errors to a minimum, the measuring systems are configured to suit the ambient and measured medium temperatures of the application. Without readings the gauges are as standard calibrated to a temperature of +20 °C (±2 °C). Gauges with a transmission line are set without a height differential between gauge and diaphragm seal. Other height differentials must be stated when ordering because this greatly influences the accuracy of measurement, especially within small measuring ranges.

Materials

All diaphragm seals are made of 1.4571 or 1.4404 stainless steel, as a matter of principle. Other materials can however be used for the membranes or the whole diaphragm seal. It is also possible to coat the diaphragm or the whole diaphragm seal – for example with PFA.

Accessories are listed as of page 14.

1/11-2014

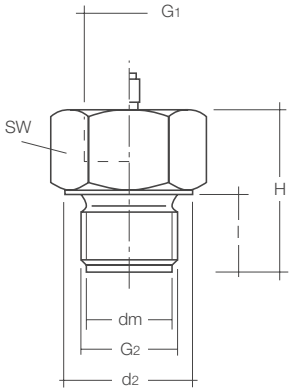

Diaphragm Seal DRM-600 / 601 with fixed male thread

Measuring range:	0 - 6 bar ... 0 - 1600 bar (with pressure sensors also smaller)
Temperature range:	-40 °C ... +200 °C
Material:	stainless steel 1.4301, st. steel 1.4571, others on request
Diaphragm:	flush mounted, stainless steel 1.4571
Max. length of capillary tube:	up to 15 m, if required with armour
Filling liquid:	following operating conditions

Model for direct mounting	Model for capillary tube	G2	G1	dm	SW	d2	l	H_{max}	Pressure range [bar]	
									min.	max.
DRM-600 R15	**DRM-601 R15**	G ½ M	G ½	18	27	27	20	42	0-100	0-1000
DRM-600 R20	**DRM-601 R20**	G ¾ M	G ½	23.8	36	36	20	46	0-40	0-1000
DRM-600 R25	**DRM-601 R25**	G 1 M	G ½	29.5	41	40.5	20	46	0-10	0-600
DRM-600 R32	**DRM-601 R32**	G 1¼ M	G ½	38	50	49.5	20	46	0-6	0-600
DRM-600 R40	**DRM-601 R40**	G 1½ M	G ½	40	60	59.5	20	46	0-6	0-600
DRM-600 N15	**DRM-601 N15**	½" NPT M	G ½	18	27	27	20	42	0-100	0-1000
DRM-600 N20	**DRM-601 N20**	¾" NPT M	G ½	18	32	-	20	46	0-40	0-1000
DRM-600 N25	**DRM-601 N25**	1" NPT M	G ½	23.8	36	-	20	46	0-10	0-600
DRM-600 N32	**DRM-601 N32**	1¼" NPT M	G ½	34.5	41	-	20	46	0-6	0-600
DRM-600 M20	**DRM-601 M20**	M20x1,5 M	G ½	18	27	27	20	46	0-100	0-600
DRM-600 M48	**DRM-601 M48**	M48x3 M	G ½	40	60	59.5	20	46	0-6	0-600

100 °C	200 °C	max. medium temperature

Welding sleeve for DRM-600 / 601

Model	Connection	Hight	Version
MZB-R15 A1	G ½ M	15 mm	PN 100
MZB-R15 A3	G ½ M	34 mm	PN 100
MZB-R20 A1	G ¾ M	16.5 mm	PN 100
MZB-R20 A3	G ¾ M	36 mm	PN 100
MZB-R25 A1	G 1 M	19 mm	PN 100
MZB-R25 A4	G 1 M	43 mm	PN 100
MZB-R32 A2	G 1¼ M	22 mm	PN 100
MZB-R32 A4	G 1¼ M	48 mm	PN 100
MZB-R32 D4	G 1¼ M	48 mm	PN 600
MZB-R40 A2	G 1½ M	22 mm	PN 100
MZB-R40 A4	G 1½ M	48 mm	PN 100

Seal for DRM-600 / 601

Model	Material	Size
MZB-DCU R25	Copper	for G 1
MZB-DCU R32	Copper	for G 1¼
MZB-DHD R20	Metal + NBR	for G ¾
MZB-DHD R25	Metal + NBR	for G 1
MZB-DHD R32	Metal + NBR	for G 1¼

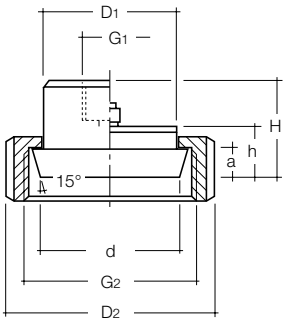

Diaphragm Seal DRM-602 / 603 with union nut according to DIN 11851 (sanitary connection)

Measuring range: 0 - 1 bar ... 0 - 40 bar (depending on nominal size)
Temperature range: -10 °C ... +200 °C (not with electr. transmitter)
Material: stainless steel 1.4301, st. steel 1.4571, others on request
Diaphragm: flush mounted, stainless steel 1.4571
Max. length of capillary tube: up to10 m, if required with if required with protection hose
Filling fluid: compatible with foodstuffs

Model for direct mounting	Model for capillary tube	G2	D1	D2	G1	DN	d	a	h	H
DRM-602 R20	-	Rd44 x 1/6"	30	54	G ½	20	32	8	16	31
DRM-602 R25	**DRM-603 R25**	Rd52 x 1/6"	35	63	G ½	25	40	8	16	31
DRM-602 R32	**DRM-603 R32**	Rd58 x 1/6"	70	70	G ½	32	46	11	16	32
DRM-602 R40	**DRM-603 R40**	Rd65 x 1/6"	48	78	G ½	40	52	11	16	32
DRM-602 R50	**DRM-603 R50**	Rd78 x 1/6"	61	92	G ½	50	64	11	16	32
DRM-602 R65	**DRM-603 R65**	Rd95 x 1/6"	79	112	G ½	65	84	13	16	32
DRM-602 R80	**DRM-603 R80**	Rd110 x ¼"	93	127	G ½	80	96	13	16	32
DRM-602 R1H	**DRM-603 R1H**	Rd130 x ¼"	114	148	G ½	100	117	13	16	32

100 °C	200 °C	max. medium temperature

Diaphragm Seal DRM-602G with round thread according to DIN 11851 (for counterpiece with union nut)

Model for direct mounting	Model for capillary tube	G2	D1	D2*	G1	DN	d**	a	h	H
DRM-602 G25	-	Rd52 x 1/6"	30	(63)	G ½	25	43	11	16	32
DRM-602 G32	-	Rd58 x 1/6"	32	(70)	G ½	32	49	11	16	32
DRM-602 G40	-	Rd65 x 1/6"	38	(78)	G ½	40	55	11	16	32
DRM-602 G50	-	Rd78 x 1/6"	50	(92)	G ½	50	64	11	16	32

max. medium temperature 100°C

* D2 = existing on customer side only **d = start of cone of thread connection

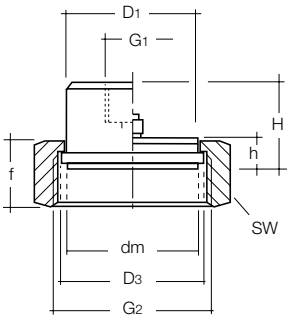

Diapgragm Seal DRM-604 / 605 with union nut acc. to IDF standard

Measuring range: 0 - 1 bar ... 0 - 100 bar (depending on nominal size)
Temperature range: -10 °C ... +200 °C (not with electr. transmitter)
Material: stainless steel 1.4301, st. steel 1.4571, others on request
Diaphragm: front flush, stainless steel 1.4571
Max. length of capillary tube: up to 10 m, if required with protection hose
Filling fluid: compatible with foodstuffs

Model for direct mounting	Model for capillary tube	G2 IDF	D1, dm	D3	G1	SW	f	h	H
DRM-604 R25	**DRM-605 R25**	1"	29.5	33.5	G ½	47	30	13	31
DRM-604 R40	**DRM-605 R40**	1½"	42.5	47	G ½	62	30	13	30.5
DRM-604 R50	**DRM-605 R50**	2"	56	60	G ½	77	30	13	30.5

100 °C	200 °C	max. medium temperature

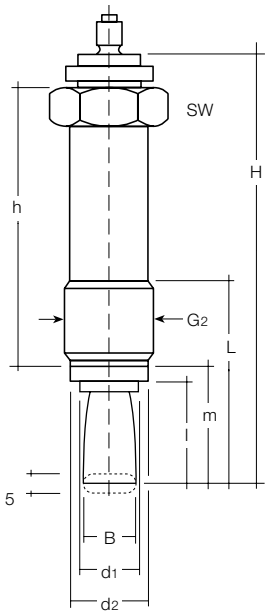

Capsule seal DRM-606, 33 cm long, standard with running nut G ¾ A, M28x1.5
for capillary connection

Measuring range:	0 - 100 bar ... 0 - 600 bar
Temperature range:	-40 °C ... +350 °C
Material:	stainless steel 1.4571, others on request
Tongue sensor:	stainless steel 1.4571
Max. length of capillary tube:	up to 15 m, if required with protection hose
Filling fluid:	MF 7 recommended

Model for capillary tube	SW	G2	B	d1	d2	l	m	L	h	H
DRM-606 R20	32	G¾	16.5	18	24	33	39	67	76	130
DRM-606 R28	32	M28x1,5M	16.5	18	24	33	39	67	76	130

350 °C	max. medium temperature

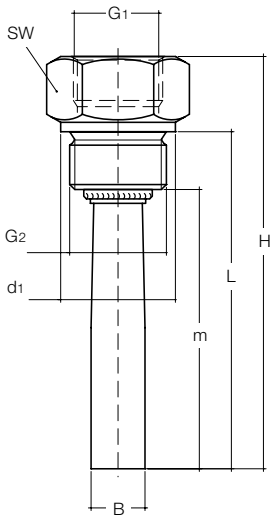

Capsule seal DRM-607 with fixed male thread

Measuring range:	0 - 6 bar ... 0 - 600 bar
Temperature range:	-40 °C ... +100 °C
Material:	stainless steel 1.4301, others on request
Tongue sensor:	stainless steel 1.4571
Max. length of capillary tube:	up to 15 m, if required with protection hose
Filling fluid:	MF 7 recommended

Model for direct mounting	Model for capillary tube	G2	SW	B	G1	d1	m	L	H
DRM-607 R15	-	G ½ M	27	16.5	G ½	27	94	102	126
DRM-607 R20	-	G ½ M	32	16.5	G ½	32	94	100	118

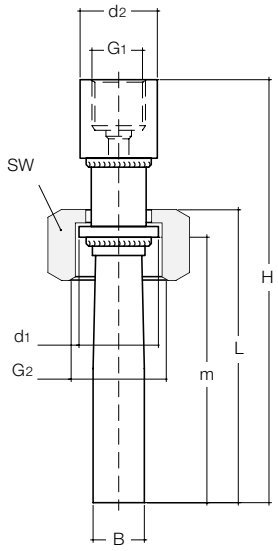

Capsule seal DRM-607 / 1 and DRM-608 / 1 with union nut

Measuring range:	0 - 6 bar ... 0 - 600 bar
Temperature range:	-40 °C ... +350 °C
Material:	stainless steel 1.4301, others on request
Tongue sensor:	stainless steel 1.4571
Max. length of capillary tube:	up to 15 m, if required with protection hose
Filling fluid:	MF 7 recommended

Model for direct mounting	Model for capillary tube	G2	SW	B	G1	d1	d2	m	L	H
DRM-607/1 R20	DRM-608/1 R20	G¾ F	32	16.5	G ½	23.5	25	85	94	132
DRM-607/1 R25	DRM-608/1 R25	G 1 F	36	16.5	G ½	29	25	85	94	132

100 °C	350 °C	max. medium temperature

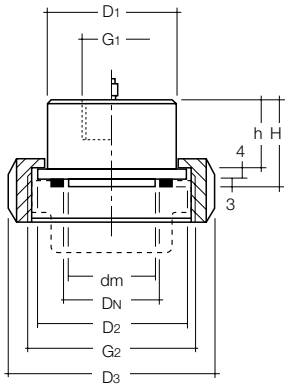

Diaphragm Seal DRM-610 / 611 with union nut to SMS standard

Measuring range:	0 - 1 bar ... 0 - 10 bar (depending on nominal size)
Temperature range:	-10 °C ... +200 °C (not with electr. transmitter)
Material of housing:	stainless steel 1.4571, others on request
Diaphragm:	front flush, stainless steel 1.4571
Max. length of capillary tube:	up to 10 m, if required with protection hose
Filling fluid:	compatible with foodstuffs

Model for direct mounting	Model for capillary tube	G2 SMS-Norm	D1	D2	dm	G1	DN	D3	h	H
DRM-610 R40	**DRM-611 R40**	1½"	47.5	55	34.5	G½	1½"	74	20	27
DRM-610 R50	**DRM-611 R50**	2"	60	65	45.5	G	2"	84	20	27

100 °C	200 °C	max. medium temperature

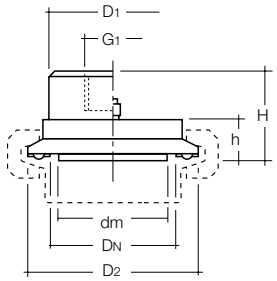

Diaphragm Seal DRM-612/613 with clamp connection

Measuring range:	0 - 2.5 bar ... 0 - 10 bar
Temperature range:	-10 °C ... +200 °C (not with electr. transmitter)
Material of housing:	stainless steel 1.4571, others on request
Diaphragm:	front flush, stainless steel 1.4571
Max. length of capillary tube:	up to 10 m, if required with protection hose
Filling fluid:	compatible with foodstuffs

Model for direct mounting	Model for capillary tube	DN	D1	D2	dm	G1	h	H
DRM-612 R25	**DRM-613 R25**	1"	42.5	50.5	18	G½	10.5	25
DRM-612 F40	**DRM-613 F40**	1½"	42.5	50.4	34.5	G½	10.5	25
DRM-612 F50	**DRM-613 F50**	2"	51	64	45.5	G½	10.5	25
DRM-612 R65	**DRM-613 R65**	2½"	63.5	77.5	52	G½	10.5	25
DRM-612 R80	**DRM-613 R80**	3"	76	91	64	G½	10.5	25

100 °C	200 °C	max. medium temperature

1/11-2014

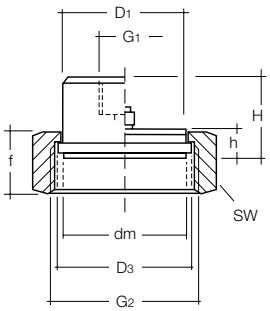

Diaphragm seal DRM-614 / 615 with union nut to APV-RJT standard

Measuring range:	0 - 1 bar ... 0 - 100 bar (depending on nominal size)
Temperature range:	-10 °C ... +200 °C (not with electr. transmitter)
Material of housing:	stainless steel 1.4571, others on request
Diaphragm:	front flush, stainless steel 1.4571
Max. length of capillary tube:	up to 10 m, if required with protection hose
Filling fluid:	compatible with foodstuffs

Model for direct mounting	Model for capillary tube	G2 APV-RJT	D1, dm	D3	G1	SW	f	h	H
DRM-614 R25	**DRM-615 R25**	1"	29.5	33.5	G½	47	30	13	31
DRM-614 R40	**DRM-615 R40**	1½"	42.5	47	G½	62	30	13	30.5
DRM-614 R50	**DRM-615 R50**	2"	56	60	G½	77	30	13	30.5

100 °C	200 °C	max. medium temperature

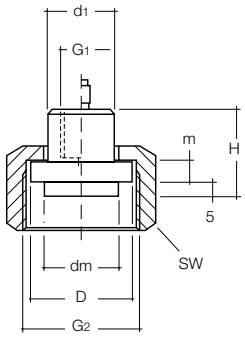

Diaphragm seal DRM-616 / 617 with union nut

Measuring range:	0 - 100 bar ... 0 - 1600 bar
Temperature range:	0 °C ... +120 °C (not with electr. transmitter)
Material of housing:	stainless steel 1.4571
Diaphragm:	front flush, stainless steel 1.4571
Max. length of capillary tube:	up to 10 m, if required with protection hose
Filling fluid:	MF 8 (foodstuff-compatible) recommended

Model for direct mounting	Model for capillary tube	G2	G1	SW	dm	D	d1	m	H
DRM-616 R45	**DRM-617 R45**	M45x2	G⅜	55	23.8	33.3	22	6	27

100 °C	120 °C	max. medium temperature

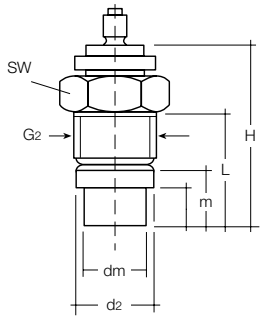

Diaphragm seal DRM-620, Ø 18 mm, rotable

with running nut for connection of capillary tube

Measuring range:	0 - 100 bar ... 0 - 600 bar
Temperature range:	0 °C ... +350 °C (not with electr. transmitter)
Material of housing:	stainless steel 1.4571, others on request
Diaphragm:	front flush, stainless steel 1.4571
Max. length of capillary tube:	up to 10 m, if required with protection hose
Filling fluid:	MF 7 recommended

Model for capillary tube	G2	dm	d2	SW	l	m	L	H
DRM-620 R20	G¾ AG	18	23.8	32	11	17	35	60

350 °C	max. medium temperature

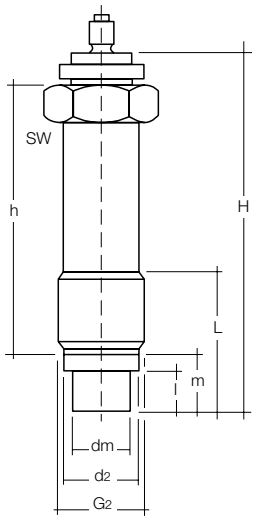

Diaphragm seal DRM-620/1, Ø 18 mm, rotable, long
with running nut for connection of capillary tube

Measuring range:	0 - 100 bar ... 0 - 600 bar
Temperature range:	0 °C ... +350 °C
Material of housing:	stainless steel 1.4571, others on request
Diaphragm:	front flush, stainless steel 1.4571
Max. length of capillary tube:	up to 10 m, if required with protection hose
Filling fluid:	MF 7 recommended

Model for capillary tube	G2	dm	d2	SW	l	m	L	h	H
DRM-620/1 R20	G ¼	18	23.8	32	11	17	45	76	107

350 °C	max. medium temperature

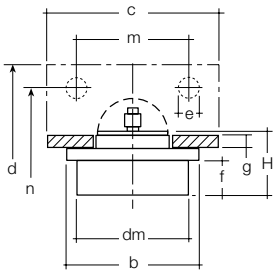

Diaphragm seal DRM-621, Ø 38 mm, rotable

Measuring range:	0 - 4 bar ... 0 - 25/40 bar
Temperature range:	-20 °C ... +250 °C (not with electr. transmitter)
Material of housing:	stainless steel 1.4571, others on request
Diaphragm:	front flush, stainless steel 1.4571
Rectangle flange:	material: passivated steel
Max. length of capillary tube:	up to 12 m, if required with protection hose
Filling fluid:	depending on operating conditions

Model for capillary tube	dm	b	c	d	e	f	g	H	m	n
DRM-621 F38	38	45	58	50	6.5	12	6	25	45	35

250 °C	max. medium temperature

1/11-2014

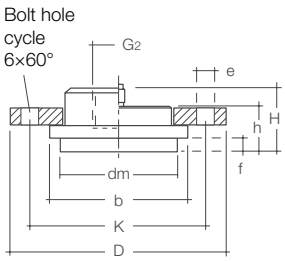

Diaphragm seal DRM-622 Ø 48 mm with mounting flange

Measuring range:	vacuum, 0 - 4 bar ... 0 - 25/40 bar
Temperature range:	-20 °C ... +200 °C
Material of housing:	stainless steel 1.4571, others on request
Diaphragm:	front flush, stainless steel 1.4571
Flange:	Ø 85 mm, material: passivated steel, 1.4571, aluminium
Max. length of capillary tube:	up to 15 m, if required with protection hose
Filling fluid:	depending on operating conditions

Model for direct mounting	Model for capillary tube	dm	b	D	K	e	f	h	H	G1
DRM-622 F48	**DRM-622/1 F48**	48	58	85	70	7	6.5	18	25	G½
DRM-622 F48 1	**DRM-622/1 F48 1**	48	58	85	70	7	18	29.5	36.5	G½
DRM-622 F48 2	**DRM-622/1 F48 2**	48	58	85	70	7	44	55.5	62.5	G½

100 °C	200 °C	max. medium temperature

Seal for DRM-622 F48

Model	Material
MZB-D T1F48	PTFE
MZB-D P1F48	Paper

Counter flange DRM-622
Model: MZB-G DRM622

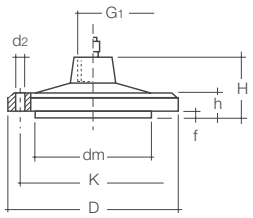

Diaphragm seal with flange connection DRM-624 Ø 100 mm

Measuring range:	0 - 1 bar ... 0 - 40 bar
Temperature range:	-40 °C ... +250 °C
Material of housing:	stainless steel 1.4571, others on request
Diaphragm:	front flush, stainless steel 1.4571
Max. length of capillary tube:	up to 15 m, if required with protection hose
Filling fluid:	depending on operating conditions

Model for direct mounting	Model for capillary tube	G1	dm	K	d2	D	f	b	H
DRM-624 F1H	**DRM-624/1 F1H**	G½	63.5	82	7	100	2	8	34.5
DRM-624 F1H T (PTFE-coating)		G½	63.5	82	7	100	2	8	34.5

100 °C	250 °C	max. medium temperature

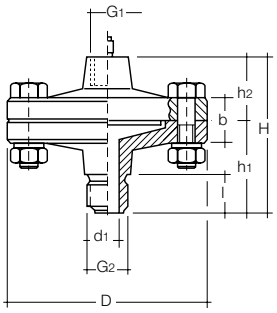

Diaphragm seal DRM-625 with connection G½ and enlarged bore, Ø 10 mm

Measuring range: 0 - 1 bar ... 0 - 40 bar (depending on nominal size)
Temperature range: -40 °C ... +250 °C
Material of housing: stainless steel 1.4571, others on request
Diaphragm: front flush, stainless steel 1.4571
Max. length of capillary tube: up to 10 m, if required with protection hose
Filling fluid: depending on operating conditions

Model for direct mounting	Model for capillary tube	D	G1	G2	d1	b	l	h1	h2	H
DRM-625 R15	**DRM-625/1 R15**	100	G ½ F	G ½ M	10	18	20	46	34.5	80.5
DRM-625 N15	**DRM-625/1 N15**	100	G ½ F	½" NPT M	10	18	20	46	34.5	80.5
DRM-625 I15	**DRM-625/1 I15**	100	G ½ F	G ½ F	10	18	20	46	34.5	80.5

100 °C	250 °C	max. medium temperature

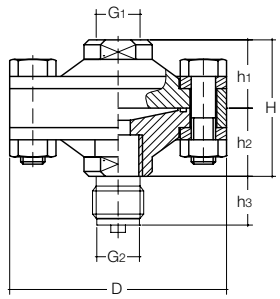

Diaphragm seal DRM-626 / 627 Vario, Ø 90 mm

Meas. range pressure gauge: 0 - 2.5 bar ... 0 - 250 bar
Meas. range sensor: 0 - 0.6 bar ... 0 - 250 bar
Temperature range: -40 °C ... +250 °C
Material for body: stainless steel 1.4571, others on request
Material for assembly elements: galvanised steel (optional stainless steel 1.457)
Material for O-ring: FPM
Material diaphragm: stainless steel 1.4571, stainless steel 1.4571 with PFA-coating, Tantal, Monel, others on request
Max. length of capillary tube: up to 10 m, if required with protection hose
Filling fluid: depending on operating conditions

Model for direct mounting	Model for capillary tube	D	G1	G2	H	H1	H2	H3	PN [bar]
DRM-626 R08 A025	**DRM-627 R08 A025**	90	G ½	G ¼ M	56	28	28	15	25
DRM-626 R08 I025	**DRM-627 R08 I025**	90	G ½	G ¼ F	56	28	28		25
DRM-626 R15 A025	**DRM-627 R15 A025**	90	G ½	G ½ M	56	28	28	20	25
DRM-626 R15 I025	**DRM-627 R15 I025**	90	G ½	G ½ F	56	28	28	-	25
DRM-626 N15 A025	**DRM-627 N15 A025**	90	G ½	½" NPT M	56	28	28	20	25
DRM-626 R08 A100	**DRM-627 R08 A100**	90	G ½	G ¼ M	56	28	28	15	100
DRM-626 R08 I100	**DRM-627 R08 I100**	90	G ½	G ¼ F	56	28	28	-	100
DRM-626 R15 A100	**DRM-627 R15 A100**	90	G ½	G ½ M	56	28	28	20	100
DRM-626 R15 I100	**DRM-627 R15 I100**	90	G ½	G ½ F	56	28	28	-	100
DRM-626 N15 A100	**DRM-627 N15 A100**	90	G ½	½" NPT M	56	28	28	20	100
DRM-626 R08 A250	**DRM-627 R08 A250**	90	G ½	G ¼ M	56	28	28	15	250
DRM-626 R08 I250	**DRM-627 R08 I250**	90	G ½	G ¼ F	56	28	28	-	250
DRM-626 R15 A250	**DRM-627 R15 A250**	90	G ½	G ½ M	56	28	28	20	250
DRM-626 R15 I250	**DRM-627 R15 I250**	90	G ½	G ½ F	56	28	28	-	250
DRM-626 N15 A250	**DRM-627 N15 A250**	90	G ½	½" NPT M	56	28	28	20	250

Assembly type up to 25 bar: 4 screws

Assembly type up to 100 bar: 4 screws, supporting ring

Assembly type up to 250 bar: 8 screws, supporting ring

100 °C	250 °C	max. medium temperature pressure gauges
80 °C	250 °C	max. medium temperature pressure sensors

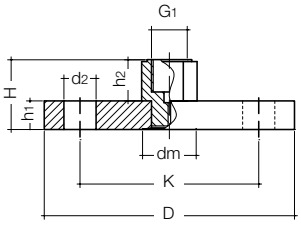

Diaphragm seal with flange connection DRM-628 / 629 to DIN with sealed-in membrane

Meas. range pressure gauge:	0 - 1.0 bar ... 0 - 40 bar*
Meas. range sensore:	0 - 0.25 bar ... 0 - 40 bar*
	*(depending on PN and DN of flange)
Temperature range:	-40 °C ... +250 °C
Material flange:	stainless steel 1.4571, others on request
Material diaphragm:	stainless steel 1.4571, others on request
Coating:	PFA-coating on request
Max. length of capillary tube:	up to 10 m, if required with protection hose
Filling fluid:	depending on operating conditions
Connection device:	G ½ female thread (G1)

Model for direct mounting	Model for capillary tube	DN	D	K	d2	H	h1	h2	dm	P1 min [bar]	P2 min [bar]	PN
DRM-628 F25 P06	**DRM-629 F25 P06**	25	100	75	11	37	14	23	24	2.5	-	6
DRM-628 F32 P06	**DRM-629 F32 P06**	32	120	90	14	37	14	23	30	1.6	-	6
DRM-628 F40 P06	**DRM-629 F40 P06**	40	130	100	14	37	14	23	38	1.0	4	6
DRM-628 F50 P06	**DRM-629 F50 P06**	50	140	110	14	37	14	23	48	0.6	2.5	6
DRM-628 F65 P06	**DRM-629 F65 P06**	65	160	130	14	37	14	23	64	0.25	1.0	6
DRM-628 F80 P06	**DRM-629 F80 P06**	80	190	150	18	39	16	23	64	0.25	1.0	6
DRM-628 F1H P06	**DRM-629 F1H P06**	100	210	170	18	39	16	23	64	0.25	1.0	6
DRM-628 F25 P16	**DRM-629 F25 P16**	25	115	85	14	39	16	23	24	2.5	-	16
DRM-628 F32 P16	**DRM-629 F32 P16**	32	140	100	18	39	16	23	30	1.6	6	16
DRM-628 F40 P16	**DRM-629 F40 P16**	40	150	110	18	39	16	23	38	1.0	4	16
DRM-628 F50 P16	**DRM-629 F50 P16**	50	165	125	18	41	18	23	48	0.6	2.5	16
DRM-628 F65 P16	**DRM-629 F65 P16**	65	185	145	18	41	18	23	64	0.25	1.0	16
DRM-628 F80 P16	**DRM-629 F80 P16**	80	200	160	18	43	20	23	64	0.25	1.0	16
DRM-628 F1H P16	**DRM-629 F1H P16**	100	220	180	18	43	20	23	64	0.25	1.0	16
DRM-628 F25 P40	**DRM-629 F25 P40**	25	115	85	14	41	18	23	24	2.5	25	40
DRM-628 F32 P40	**DRM-629 F32 P40**	32	140	100	18	41	18	23	30	1.6	6	40
DRM-628 F40 P40	**DRM-629 F40 P40**	40	150	110	18	41	18	23	38	1.0	4	40
DRM-628 F50 P40	**DRM-629 F50 P40**	50	165	125	18	43	20	23	48	0.6	2.5	40
DRM-628 F65 P40	**DRM-629 F65 P40**	65	185	145	18	45	22	23	64	0.25	1.0	40
DRM-628 F80 P40	**DRM-629 F80 P40**	80	200	160	18	47	24	23	64	0.25	1.0	40
DRM-628 F1H P40	**DRM-629 F1H P40**	100	235	190	22	47	24	23	64	0.25	1.0	40

100 °C	250 °C	max. medium temperature pressure gauge
80 °C	250 °C	max. medium temperature pressure sensor

P1 = Mounting of pressure sensors

P2 = Mounting of pressure gauge

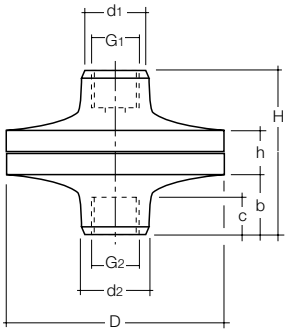

Connection
to fluid

Diaphragm seal DRM-630 / 631 from plastic

Measuring range: 0 - 1.6 bar ... 0 - 10 bar
Temperature range: 0 °C ... +40 °C
Material housing: PVC (Polyvinylchlorid), PP (Polypropylen)
Diaphragm: Hypalon with PTFE-coating (others on request)
Filling fluid: depending on operating conditions

Model for direct mounting	Model for capillary tube	Mate-rial	D	G1	G2	d1	d2	b	c	h	H
DRM-630 R08	**DRM-630/1 R08**	PVC	90	G ¼	G ¼	32	32	25	18	24	75
DRM-630 R15	**DRM-630/1 R15**	PVC	90	G ½	G ½	32	32	25	18	34	75
DRM-630 N15	**DRM-630/1 N15**	PVC	90	½" NPT	½" NPT	32	32	25	18	34	75
DRM-631 R08	**DRM-631/1 R08**	PP	90	G ¼	G ¼	32	32	25	18	24	75
DRM-631 R15	**DRM-631/1 R15**	PP	90	G ½	G ½	32	32	25	18	34	75
DRM-631 N15	**DRM-631/1 N15**	PP	90	½" NPT	½" NPT	32	32	25	18	34	75

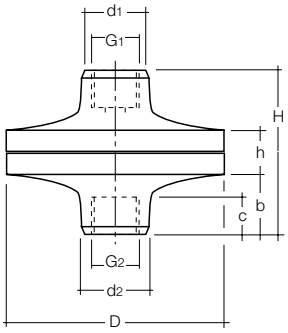

Connection
to fluid

Diaphragm seal DRM-632 from PVDF

Measuring range: 0 - 1.6 bar ... 0 - 16 bar
Temperature range: 0 °C ... +50 °C
Material housing: PVDF (Polyvinylfluorid)
Diaphragm: Hypalon with PTFE-coating (others on request)
Filling fluid: depending on operating conditions

Model for direct mounting	Model for capillary tube	D	G1	G2	d1	d2	b	c	h	H
DRM-632 R08	**DRM-632/1 R08**	90	G ¼	G ¼	32	32	25	18	24	75
DRM-632 R15	**DRM-632/1 R15**	90	G ½	G ½	32	32	25	18	24	75
DRM-632 N15	**DRM-632/1 N15**	90	½" NPT	½" NPT	32	32	25	18	24	75

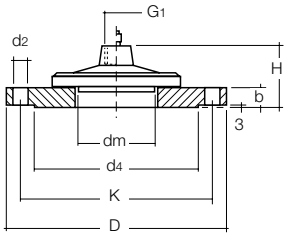

Diaphragm seal with flange connection DRM-633, Ø 100 mm, with open mounting flange DIN 2527 type C

Measuring range: 0 - 1 bar ... 0 - 40 bar (0 - 6 bar with DN100)
Temperature range: -40 °C ... +250 °C
Material: stainless steel 1.4301, st. steel 1.4571, others on request
Diaphragm: front flush, stainless steel 1.4571
Max. length of capillary tube: bis 15 m, if required with protection hose
Filling fluid: depending on operating conditions

Model for direct mounting	Model for capillary tube	Flange DN/PN	G1	dm	d4	K	D	d2	b	H
DRM-633 F50	**DRM-633/1 F50**	50/40	G ½	64	102	125	165	18	20	54.5
DRM-633 F1H	**DRM-633/1 F1H**	100/6	G ½	64	148	210	210	18	16	50.5

100 °C	250 °C	max. medium temperature

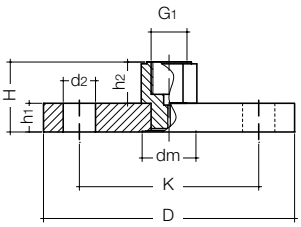

Diaphragm seal with flange connection DRM-634/635 to ANSI B16,5 with sealed-in membrane

Meas. range pressure gauge:	0 - 15 psi ... 0 - 1500 psi (0 - 1,0 bar ... 0 - 100 bar) depending on PN und DN of flange
Meas. range sensor:	0 - 4 psi ... 0 - 1500 psi (0 - 0,25 bar ... 0 - 100 bar) depending on PN and DN of flange
Temperature range:	-40 °C ... +250 °C
Material flange:	stainless steel 1.4571, others on request
Material diaphragm:	stainless steel 1.4571, others on request
Coating:	PFA-coating on request
Max. length of capillary tube:	10 m, if required with protection hose
Filling fluid:	depending on operating conditions
Connection device:	G ½ female thread (G1)

Model for direct mounting	Model for capillary tube	DN	D	K	d2	H	h1	h2	dm	P1 min [psi]	P2 min [psi]	PN [psi]
DRM-634 A25 P150	DRM-635 A25 P150	1"	107.9	76.4	16	37.3	14.3	23	30	25	90	150
DRM-634 A32 P150	DRM-635 A32 P150	1¼"	117.5	88.9	16	38.9	15.9	23	38	15	60	150
DRM-634 A40 P150	DRM-635 A40 P150	1½"	127	98.4	16	40.5	17.5	23	38	15	60	150
DRM-634 A50 P150	DRM-635 A50 P150	2"	152.4	120.6	19	42	19	23	48	10	40	150
DRM-634 A65 P150	DRM-635 A65 P150	2½"	177.8	139.7	19	45.2	22.2	23	48	10	40	150
DRM-634 A80 P150	DRM-635 A80 P150	3"	190.5	152.4	19	46.8	23.8	23	64	4	15	150
DRM-634 A90 P150	DRM-635 A90 P150	3½"	215.9	177.8	19	46.8	23.8	23	64	4	15	150
DRM-634 A1H P150	DRM-635 A1H P150	4"	228.6	190.5	19	46.8	23.8	23	64	4	15	150
DRM-634 A25 P300	DRM-635 A25 P300	1"	123.8	88.9	19	40.5	17.5	23	30	25	90	300
DRM-634 A32 P300	DRM-635 A32 P300	1¼"	133.3	98.4	19	42	19	23	38	15	60	300
DRM-634 A40 P300	DRM-635 A40 P300	1½"	155.6	114.3	22	43.2	20.6	23	38	15	60	300
DRM-634 A50 P300	DRM-635 A50 P300	2"	165.1	127	19	45.2	22.2	23	48	10	40	300
DRM-634 A65 P300	DRM-635 A65 P300	2½"	190.5	149.2	22	48.4	25.4	23	48	10	40	300
DRM-634 A80 P300	DRM-635 A80 P300	3"	209.5	168.3	22	51.6	28.6	23	64	4	15	300
DRM-634 A90 P300	DRM-635 A90 P300	3½"	228.6	184.1	22	53.2	30.2	23	64	4	15	300
DRM-634 A1H P300	DRM-635 A1H P300	4"	254	200	22	54.7	31.7	23	64	4	15	300
DRM-634 A25 P600	DRM-635 A25 P600	1"	123.8	88.9	19	46.9	23.9	23	30	25	90	600
DRM-634 A32 P600	DRM-635 A32 P600	1¼"	133.3	98.4	19	40	27	23	30	15	60	600
DRM-634 A40 P600	DRM-635 A40 P600	1½"	155.6	114.3	22	41.6	28.6	23	38	15	60	600
DRM-634 A50 P600	DRM-635 A50 P600	2"	165.1	127	19	54.8	31.8	23	48	10	40	600
DRM-634 A65 P600	DRM-635 A65 P600	2½"	190.5	149.2	22	58	35	23	48	10	40	600
DRM-634 A80 P600	DRM-635 A80 P600	3"	209.5	168.3	22	61.1	38.1	23	64	4	15	600
DRM-634 A90 P600	DRM-635 A90 P600	3½"	228.6	184.1	25	64.3	41.3	23	64	4	15	600
DRM-634 A1H P600	DRM-635 A1H P600	4"	273	215.9	25	67.5	44.5	23	64	4	15	600
DRM-634 A25 P1K5	DRM-635 A25 P1K5	1"	149.2	101.6	25	58	35	23	30	25	90	1500
DRM-634 A32 P1K5	DRM-635 A32 P1K5	1¼"	158.7	111.1	25	58	35	23	38	15	60	1500
DRM-634 A40 P1K5	DRM-635 A40 P1K5	1½"	177.8	123.8	29	61.1	38.1	23	38	15	60	1500
DRM-634 A50 P1K5	DRM-635 A50 P1K5	2"	215.9	165.1	25	67.5	44.5	23	48	10	40	1500
DRM-634 A65 P1K5	DRM-635 A65 P1K5	2½"	244.5	190.5	29	70.7	47.7	23	48	10	40	1500
DRM-634 A80 P1K5	DRM-635 A80 P1K5	3"	266.7	203.2	32	77	54	23	64	4	15	1500
DRM-634 A1H P1K5	DRM-635 A1H P1K5	4"	311.1	241.3	35	83.4	60.4	23	64	4	15	1500

100 °C	250 °C	max. medium temperature pressure gauge
80 °C	250 °C	max. medium temperature pressure sensor

P1 = Mounting of pressure sensors

P2 = Mounting of pressure gauge

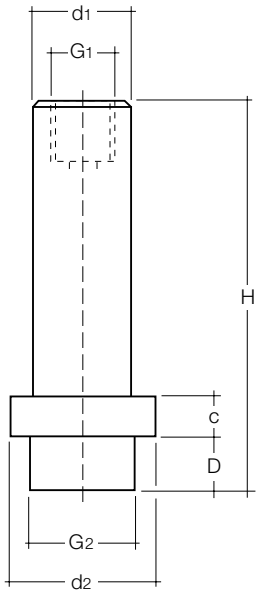

Diaphragm Seals DRM-189 for homogenising machines, for direct mounting to pressure gauges

Measuring range:	0 - 100 bar ... 0 - 1000 bar
Temperature range:	0 °C ... +120 °C (calibration temperature +85°C)
Material housing:	stainless steel 1.4571
Diaphragm:	front flush, stainless steel 1.4571
Max. length of capillary tube:	not available
Filling fluid:	MF 8 (foodstuff-compatible) recommended

Model for direct mounting	D	dm	d1	a	h	H	G1
DRM-189 F23	34.5	23.8	22	10	12.5	90.5	G⅜

Accessories for pressure gauges

	Material	Code
Protection hose (capillary tube)	W. 1.4301	**A**
Protection against buckling (capillary tube)	steel	**C**
Elbow joint	passivated steel	**D**
Intermediate piece	passivated steel	**E**
Temperature calibration up to +100 °C		**G**
Temperature calibration from +100 °C		**H**
Special calibration (e. g. height adjustment, 2 temperatures)		**I**
PTFE-coating		**K**
Halar-coating		**L**
Special materials		**S**
Welded contra flange for measuring adapter 48 mm (DRM-622)		**DRM-622 G**
Mounting set (screw and sealings)		**GRM-ZM1**
Mounting set PTFE (VA-screws and PTFE-sealings)		**DRM-ZM2**

1/11-2014

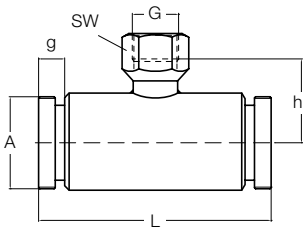

Inline diaphragm seal DRM-500 / 501, sterile connection ISO, for direct mounting and with capillary tube

Measuring range:	1,6 - 40 bar ... 2,5 - 40 bar (depending on the pipe diameter)
Temperature range:	up to 80 °C (>30 min. to 140 °C)
Housing:	stainless steel 1.4571
Diaphragm tube:	stainless steel 1.4571 (DN 15/20/25/40), stainless steel 1.4404 resp. 1.4435 (DN 50)
Socket connection:	stainless steel 1.4301 (DN 15/20), stainless steel 1.4435 (DN 25/40/50)
Filling fluid:	depending on operating conditions

Model for direct mounting	Model for capillary tube	DN	A	L	h	G	g	SW
DRM-500 D15	**DRM-501 D15**	15	M30×2	130	26	G¼	12	17
DRM-500 D20	**DRM-501 D20**	20	M36×2	120	30	G¼	12	17
DRM-500 D25	**DRM-501 D25**	25	M42×2	120	33	G½	12	27
DRM-500 D40	**DRM-501 D40**	40	M56×2	110	39	G½	14	27
DRM-500 D50	**DRM-501 D50**	50	M68×2	100	45	G½	14	27

Model for direct mounting	Model for capillary tube	DN	for tube	O-ring	Weight [kg]	Inner form
DRM-500 D15	**DRM-501 D15**	15	26.9×2.0	18.5×3.0	0.6	square
DRM-500 D20	**DRM-501 D20**	20	33.7×2.0	25.0×3.0	0.8	square
DRM-500 D25	**DRM-501 D25**	25	48.3×2.0	30.0×3.0	0.9	hexagonal
DRM-500 D40	**DRM-501 D40**	40	60.3×2.0	45.0×3.0	1.3	hexagonal
DRM-500 D50	**DRM-501 D50**	50	88.9×2.0	55.0×3.0	1.6	hexagonal

DN ½" - 1"

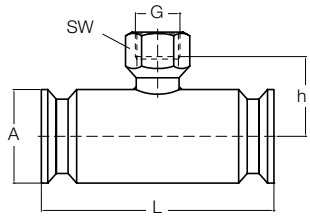

Inline diaphragm seal DRM-502 with clamp connection ISO 2852 for direct mounting

Measuring range:	1,6 - 40 bar ... 2,5 - 40 bar (depending on the pipe diameter)
Temperature range:	up to 80 °C (>30 min. to 140 °C)
Housing:	stainless steel 1.4435
Diaphragm tube:	stainless steel 1.4435 (DN 15/20/25), stainless steel 1.4404 (DN 40/50)
Socket connection:	stainless steel 1.4301 (DN 15/20/25), stainless steel 1.4435 (DN 40/50)
Filling fluid:	depending on operating conditions

DN 1 ½" - 2"

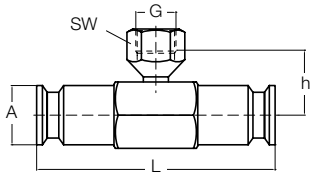

Model for direct mounting	DN	A	L	h	G	SW	Weight [kg]	Inner form
DRM-502 D15	½"	25	140	24	G½	17	0.5	square
DRM-502 D15	¾"	25	120	27	G½	27	0.5	square
DRM-502 D15	1"	50.5	120	36	G½	27	1.6	square
DRM-502 D15	1½"	50.5	120	36	G½	27	1.2	hexagonal
DRM-502 D15	2"	64	100	45	G½	27	1.3	hexagonal

Cooling Elements for Pressure Gauges Model DRM

Multipart design

- Very good cooling effect
- Perforated sheet body transmits little heat
- t_{max} = 450 °C
- PN 600 (temperature-dependent)
- All parts are made of 1.4571 stainless steel
- Pressure transmission with a capillary line (Ø inner 1.0 mm), that in addition balances out the pulsation of the measured pressure
- Also for direct mounting of diaphragm seals (t_{max} = 350 °C)

One-part design

- Good cooling effect
- Optimum ration of surface to geometry
- t_{max} = 300 °C
- PN 600 (temperature-dependent)
- Body made of 1.4571 stainless steel
- Pressure transmission with tube diameter (Ø inner 3.5 mm), thus no change in reaction time
- Cheaper version
- For use with high viscosity media

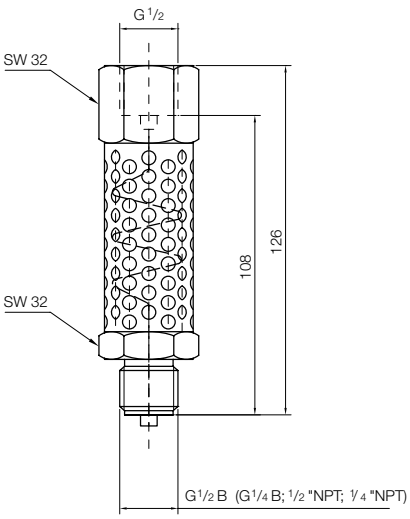

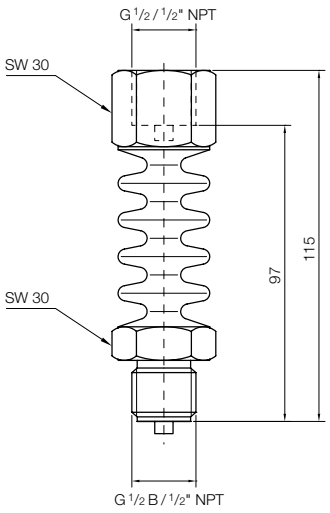

Temperature drift (guide value for cooling effect) and range of use (rated pressure)

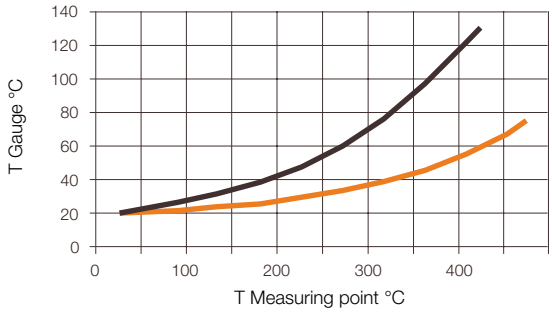

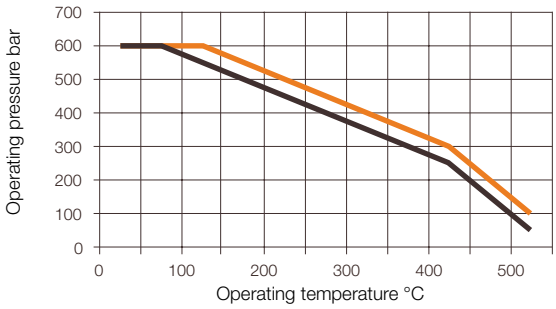

MZB-711.7221 to MZB-711.7224 = multipart design
MZB-711.7225 and MZB-711.7226 = one-part design

Order Details

Model	Connection meas. device	Process connection
MZB-711.7221	G ½ F	G ¼ M
MZB-711.7222	G ½ F	G ½ M
MZB-711.7223	G ½ F	¼" NPT M

Model	Connection meas. device	Process connection
MZB-711.7224	G ½ F	½" NPT M
MZB-711.7225	G ½ F	G ½ M
MZB-711.7226	½" NPT F	½" NPT M

Other connections on request

1/11-2014

Zertifiziertes QM-System
DIN EN ISO 9001
Zertifikat-Nr. 01017

Contact Device

for Pressure Gauges

measuring • monitoring • analysing

MAN-..S/M/I/P

- For housing diameter 100 mm or 160 mm
- Slow-action contacts
- Magnetic spring contacts
- Inductive contacts
- Pneumatic contacts

P1

KOBOLD companies worldwide:

ARGENTINA, AUSTRIA, BELGIUM, BULGARIA, CANADA, CHILE, CHINA, COLOMBIA, CZECHIA, DOMINICAN REPUBLIC, EGYPT, FRANCE, GERMANY, GREAT BRITAIN, HUNGARY, INDIA, INDONESIA, ITALY, MALAYSIA, MEXICO, NETHERLANDS, PERU, POLAND, ROMANIA, SINGAPORE, SOUTH KOREA, SPAIN, SWITZERLAND, TAIWAN, THAILAND, TUNISIA, TURKEY, USA, VIETNAM

KOBOLD Messring GmbH
Nordring 22-24
D-65719 Hofheim/Ts.
Head Office:
+49(0)6192 299-0
+49(0)6192 23398
info.de@kobold.com
www.kobold.com

Application

Electromechanical and electronic limit monitors serve to open and close electrical switching circuits depending on the position of the instrument display. They are suitable for fitting in housings with 100 and 160 mm Ø.

The limit values are adjusted from outside with a setting lock. The limit monitor is set with a detachable key to the value at which the switching operation is to be carried out. The rotary knob can also be permanently mounted on the inspection glass.

The construction of the limit monitor is such that the instrument can continue operating past the setting pointer after successful contact operation.

The maximum setting range is approximately 270 degrees. Ambient temperatures of -20 °C ... +70 °C have no effect on the reliability performance.

We strongly recommend the use of our contact protection relays in applications with high breaking capacities or vibrations, or for service in damping liquids (oil). These relays have been specially designed for electromechanical limit monitors and their use is mandatory.

Electrical connection

The standard electrical connection uses a lateral 6-pin cable socket (Screwed cable connection M20 x 1.5 for cable diameters from 7...13 mm, wire diameter up to 1.5 mm²).

The following connection variations are optionally available:

- M12 plug, 5-pin
- Harting plug incl. mating plug
- DIN 43 650 cable box, 3-pin (valve plug)
- DIN 43 651 device plug and cable box, 6-pin with earth contact
- Cable box with illuminated display
- Cable (cable length acc. to cable customer specifications)

In the cases of pressure gauges with edging on the front or with a triangular front ring with bracket the electrical connection is on the back.

Other connection types are available on request.

Damping liquid

Only electrically non-conductive fluids can be used as damping fluids for contact pressure gauges. We use liquid paraffin as standard. The following contacts are available:

- Slow action contacts
- Magnetic spring contacts
- Inductive contacts
- Pneumatic contacts

Magnetic spring contacts

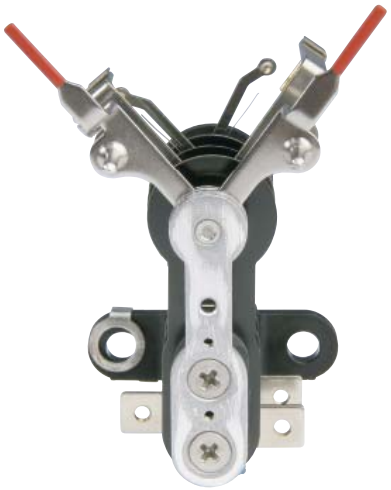

Magnetic spring contacts are suitable for service under almost all operating conditions. They are almost completely insensitive to vibrations.

The contact pin carrier of the setting pointer is fitted with an adjustable magnet which pulls in the wiper shortly before the set value is reached. Arcing is thus avoided and the pin is prevented from being scorched. Because the magnetic force becomes effective during the switching operation with this construction, the setting pointer must be advanced or retarded by the forming differential gap of approximately 3-6% of full scale value.

Switching values with standard contact material silver-nickel (80/20)

Switching voltage:	max. 250 $V_{AC/DC}$
Breaking capacity:	max. 30 W / 50 VA
Switching current:	max. 0,6 A
Alternative contact materials:	gold/silver (80/20) or platinum (values on request)

Where there are multiple contacts, these are joined together with a common return. As an option, the pressure gauges with twin contacts are also available with a separate return. It is also possible to produce a coupled second contact with a fixed switching distance for the first contact according to customer specifications.

Slow-action contacts

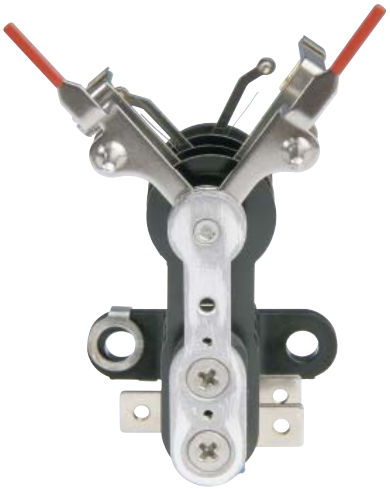

These contacting devices switch free of delay in the same way as the motion of the actual-value pointer. They should be used where no contact loading is required and the instruments are not exposed to vibrations. Due to sparking the contacting devices should not be used where there is a danger of explosion. Care should also be taken that the contacting devices are not exposed to the effects of aggressive vapours.

Switching values with standard contact material silver-nickel (80/20)

Switching voltage:	max. 250 $V_{AC/DC}$
Breaking capacity:	max. 10 W / 18 VA
Switching current:	max. 0,6 A
Alternative contact materials:	gold/silver (80/20) or platinum (values on request)

Where there are multiple contacts, these are joined together with a common return. As an option, the pressure gauges with twin contacts are also available with a separate return. It is also possible to produce a coupled second contact with a fixed switching distance for the first contact according to customer specifications.

Inductive contacts according to DIN 19234 (Namur)

The inductive contact device comprises mainly the control head (initiator) attached to the setpoint pointer with its completely assembled encapsulated electronics and mechanical assembly with moving control vane. The control vane is moved by the instrument pointer (setpoint pointer). The control head is supplied with DC voltage.

When the control vane is immersed in the air gap of the control head, its inner resistance increases (damped condition, the initiator is high-resistive). The resulting change in current intensity is the input signal for the switching amplifier in the control unit. Inductive contacts are suitable for service where explosion protection and high reliability and switching rate, that is, long service life, are required.

Advantages of the inductive contact device:

- Long service life with non-contact switching
- Negligible reaction on the display
- Insensitive to aggressive environments (encapsulated electronics)
- Nominal voltage: 8 V_{DC} (Ri = 1 kΩ)

Pneumatic contacts

Pneumatic limit signal transmitters work without contact and with a very low feedback onto the mechanical pressure measuring system. They do not generate any electrical contact problems like wear, welding or excessive contact transfer resistance. Pneumatic contacts are used where controls work using pneumatic regulation and require high reliability and switching frequency, i.e. a longer life.

Advantages of inductive limit signal transmitters:

- Works without electricity
- Long life due to non-touching contact making
- Low feedback to the display
- Non-sensitive to aggressive surroundings due to its construction

Functional principle

The pneumatic limit signal transmitter basically consists of a control head mounted on the set-point indicator (proximity switch) and the mechanical construction with the moving control lug. The control lug is moved by the instrument indicator (actual reading indicator). The proximity switches integrated into the pneumatic contacts work using the air jet cutting procedure. The proximity switches are constructed in such a way that there are two nozzles axially opposite each other on each of the air gap. One is a jet nozzle and one a diffuser. A constant supply air with 1.4 bar ± 0.1 bar is required as auxiliary power. A capillary restriction in the intake, in front of the jet nozzle, reduces the pressure to approximately 0.1 bar. The exit pressure at the diffuser is approximately 40 mbar. The air jet is interrupted by dipping the control lug into the proximity switch. There is no switching delay when the set-point indicator and actual value indicator are congruent.

A downstream low pressure switch (binary transformer P/P or P/E) transforms the output pressure of 40 mbar into a standard signal of 1.4 bar (P/P) or into an electrical signal (P/E).

Switch functions

- Pointer movement clockwise: open or close
- Open: The air jet is interrupted by dipping the control lug into the proximity switch
- Close: The air jet is closed by the control lug emerging from the proximity switch
- Indicator in front of the contact mark
  4.: Pneumatic contact
- Indicator behind the contact mark shows the switching operation
  1: Close
  2: Open

Magnetic spring contacts/slow-action contacts

Limit monitor with 1 contact		
Switching function (when the limit value is exceeded)	**Order code Magnetic spring contact**	**Order code Slow action contact**
Contact closes	**..M1**	**..S1**
Contact opens	**..M2**	**..S2**
Contact switches over, that is, contact opens, contacts closes	**..M3**	**..S3**

Limit monitor with 2 contacts		
First and second contact closes	**..M11**	**..S11**
1. Contact closes 2. Contact opens	**..M12**	**..S12**
1. Contact opens 2. Contact closes	**..M21**	**..S21**
First and second contact opens	**..M22**	**..S22**
First and second contact switches over	**..M33**	**..S33**

Limit monitor with 3 contacts		
3 contacts close	**..M3A**	**..S3A**
3 contacts open	**..M3Z**	**..S3Z**
3 contacts, switching function upon customer specification	**..M3G**	**..S3G**

Limit monitor with 4 contacts		
4 contacts close	**..M4A**	**..S4A**
4 contact open	**..M4Z**	**..S4Z**
4 conatcts, switching function upon customer specification	**..M4G**	**..S4G**

Inductive contacts/pneumatic contacts

Limit monitor with 1 contact			
If the pressure gauge moves clockwise it will move the control lug when the set limit is exceeded	**Control action**	**Order code Inductive contact**	**Order code Pneumatic contact**
out of the control head	Control current/air current circuit is closed	**..I1**	**..P1**
into the control head	Control current/air current circuit is opened	**..I2**	**..P2**

Limit monitor with 2 contacts			
of the 1. and 2. contact from the control head	Control current/air current circuits are closed	**..I11**	**..P11**
of the 1. contact from the control head of the 2. contact in the control head	1. Control current/air current circuit closes 2. Control current/air current circuit opens	**..I12**	**..P12**
of the 1. contact from the control head of the 2. contact in the control head	1. Control current/air current circuit opens 2. Control current/air current circuit closes	**..I21**	**..P21**
of the 1. and 2. contact from the control head	Control current/air current circuits are opened	**..I22**	**..P22**

Contact Device for Pressure Gauges Model MAN-..S/M/I/P

Pin assignment

Contact	Cable box (standard)	DIN 43651 (round Hirschmann)
Magnetic-/ slow action contact	K = contact / R = conductor	plus cable connection
1 Conductor	E = earth / mass	
M/S 1	K=1 R=2 E=6	K=1 R=2 E=E
M/S 2		
M/S 3	K11=1 K13=2 R1=3 E=6	K11=1 K13=2 R1=3 E=6
M/S 11	K1=1 K2=2 R=3 E=6	K1=1 K2=2 R=3 E=E
M/S 12		
M/S 21		
M/S 22		
M/S 33	K11=1 K13=2 K21=3 K23=4 R2=5 E=6	K11=1 K13=2 K21=3 K23=4 R2=5 E=E
M/S 111	K1=1 K2=2 K3=3 R=4 E=6	K1=1 K2=2 K3=3 R=4 E=E
M/S 112		
M/S 121		
M/S 122		
M/S 211		
M/S 212		
M/S 221		
M/S 222		
M/S 1111	K1=1 K2=2 K3=3 K4=4 R=5 E=6	K1=1 K2=2 K3=3 K4=4 R=5 E=E
M/S 1112		
M/S 1121		
M/S 1211		
M/S 1122		
M/S 1221		
M/S 1222		
M/S 2111		
M/S 2112		
M/S 2121		
M/S 2211		
M/S 2122		
M/S 2212		
M/S 2221		
M/S 2222		

Contact	Cable box (standard)	DIN 43651 (round Hirschmann)
Magnetic-/slow action contact	K = contact / R = conductor	plus cable connection
Separated return conductor	E = earth / mass	
M/S 11	K1=1 R1=3 K2=2 R2=4 E=6	K1=1 R1=3 K2=2 R2=4 E=E
M/S 12		
M/S 21		
M/S 22		
M/S 33	K11=1 K13=2 R1=3 K21=4 K23=5 R2=6 E=E	K11=1 K13=2 R1=3 K21=4 K23=5 R2=6 E=E
M/S 111	K1=1 R1=2 K2=3 R2=4 K3=5 R3=6 E=E	K1=1 R1=2 K2=3 R2=4 K3=5 R3=6 E=E
M/S 112		
M/S 121		
M/S 122		
M/S 211		
M/S 212		
M/S 221		
M/S 222		

Contact Device for Pressure Gauges Model MAN-..S/M/I/P

Pin assignment

Contact	Cable box (standard)	DIN 43651 (round Hirschmann))
Inductive contact	K = contact / R = conductor	plus cable connection
	E = earth / mass	
I 1	-K=1 +K1=2 E=6	-K=1 +K2=2 E=E
I 2		
I 11	-K1=1 +K1=3 -K2=2 +K2=4 E=E	-K=1 +K1=3 -K2=2 +K2=4 E=E
I 12		
I 21		
I 22		
I 111	-K1=1 +K1=2 -K2=3 +K2=4 -K3=5 +K3=6 E=E	-K=1 +K1=2 -K2=3 +K2=4 -K3=5 +K3=6 E=E
I 112		
I 121		
I 122		
I 211		
I 212		
I 221		
I 222		

Contact	DIN 43650	M12; 5 pole
Magnetic-/ slow action contact	(Cube plug)	
1 Conductor	K = contact / R = conductor / E = earth / mass	
M/S 1	K=1 R=2 E=E	K=1 R=2 E=5
M/S 2		
M/S 3	K11=1 K13=2 R1=3 E=E	K11=1 K13=2 R1=3 E=5
M/S 11	K1=1 K2=2 R=3 E=E	K1=1 K2=2 R=3 E=5
M/S 12		
M/S 21		
M/S 22		
M/S 33	not possible	not possible
M/S 111	not possible	K1=1 K2=2 K3=3 R=4 E=5
M/S 112		
M/S 121		
M/S 122		
M/S 211		
M/S 212		
M/S 221		
M/S 222		

Contact	DIN 43650	M12; 5 pole
Magnetic-/ slow action contact	(Cube plug)	
Separated return conductor	K = contact / R = conductor / E = earth / mass	
M/S 11	not possible	K1=1 R1=3 K2=2 R2=4 E=5
M/S 12		
M/S 21		
M/S 22		
Inductive contact		
I 1	-K1=1 +K1=2 E=E	-K1=1 +K1=2 E=5
I 2		
I 11	not possible	-K1=1 +K1=3 -K2=2 +K2=4 E=5
I 12		
I 21		
I 22		

1/02-2014

M-Zert
Zertifiziertes QM-System
DIN EN ISO 9001
Zertifikat-Nr. 01017

Options for Pressure Gauges

KOBOLD

measuring • monitoring • analysing

MAN-OPT

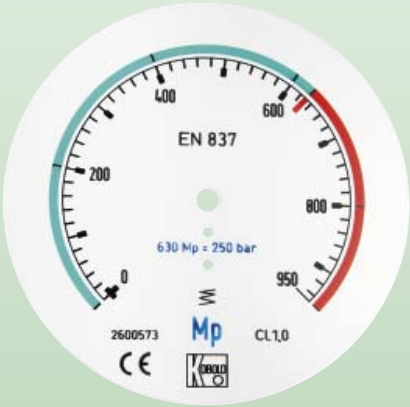

- Marking and trailing pointer
- Housing designs
- Screws
- Special connections
- Special scales, high precision scale
- Calibration protocols

P1

KOBOLD companies worldwide:
ARGENTINA, AUSTRIA, BELGIUM, BULGARIA, CANADA, CHILE, CHINA, COLOMBIA, CZECHIA, DOMINICAN REPUBLIC, EGYPT, FRANCE, GERMANY, GREAT BRITAIN, HUNGARY, INDIA, INDONESIA, ITALY, MALAYSIA, MEXICO, NETHERLANDS, PERU, POLAND, ROMANIA, SINGAPORE, SOUTH KOREA, SPAIN, SWITZERLAND, TAIWAN, THAILAND, TUNISIA, TURKEY, USA, VIETNAM

KOBOLD Messring GmbH
Nordring 22-24
D-65719 Hofheim/Ts.
Head Office:
+49(0)6192 299-0
+49(0)6192 23398
info.de@kobold.com
www.kobold.com

Options for Pressure Gauges Model MAN-OPT

Housing diameter		NG 63	NG 80	NG 100	NG 160		
Model		MAN-RD	MAN-RE	MAN-RF MAN-PF	MAN-RG MAN-PG	MAN-F	MAN-K
		Code will be attached to the pressure gauge's order code (Example: MAN-RD21 AD A)					
Special Pointer							
Marking pointer, red, rear plate, adjustable		A	A	A	A	A	A
Trailing pointer, unfilled housing		B1	B1	B1	B1	B1	B1
MIN-/MAX-Trailing pointer, unfilled housing		B2	B2	B2	B2	B2	B2
Trailing pointer, filled housing		C1	C1	C1	C1	C1	C1
MIN-/MAX-Trailing pointer, filled housing		C2	C2	C2	C2	C2	C2
Housing designs							
Cover ring from st. steel 1.4301 for aluminium housing		D	D	D	D	D	D
Front flange, from stainless steel 1.4301		-	-	F	F	F	F
Front flange, chrome plated		-	-	G	G	G	G
Strap at rear for NG100, st. steel housing		-	-	H	-	-	-
Back flange		-	-	I	I	I	I
Triangle front ring		M	M	M	M	M	M
Screw							
Brass	Bore hole 0.8 mm	L1	D	D	D	D	D
Brass	Bore hole 0.5 mm	L2	F	F	F	F	F
Brass	Bore hole 0.6 mm	L3	G	G	G	G	G
Stainless steel	Bore hole 0.8 mm	N1	-	-	-	-	-
Stainless steel	Bore hole 0.5 mm	N2	I	I	I	I	I
Stainless steel	Bore hole 0.6 mm	N3	M	M	M	M	M
Special versions							
Spring loaded zero-stop and throttle		O	O	O	O	O	O
Unit oil-free and degreased		PF	PF	PF	PF	PF	PF
Unit silicone free		PS	PS	PS	PS	PS	PS
Unit vacuum safe		Q	Q	Q	Q	Q	Q
Safety glass, made of laminated glass		R	R	R	R	R	R
Special connections							
Brass M20x1,5		S	S	S	S	S	S
Stainless steel M20x1,5		T	T	T	T	T	T
Scales							
Special scales		U	U	U	U	U	U
Precision scale	knife edge pointer DIN 16123/BL2	V	V	V	V	V	V
Marking	coloured marking	W	W	W	W	W	W
Scales with company logo, one-time		X	X	X	X	X	X
Printed block artwork (per scale)		Z1	Z1	Z1	Z1	Z1	Z1
Printed block artwork (per scale)	for neutral scale >25 pieces free of charge	Z2	Z2	Z2	Z2	Z2	Z2
Protocols and certificates							
Calibration protocol	5 measuring points	1	1	1	1	1	1
Calibration protocol	10 measuring points	2	2	2	2	2	2
DKD-certificate		3	3	3	3	3	3
Governmental approved calibration (<400 bar)							
Cal. insignia class 1.0 cal. protocol		4	4	4	4	4	4
Cal. insignia class 0.6 cal. protocol		5	5	5	5	5	5
Governmental approved calibration (≥400 bar)		6	6	6	6	6	6

1/04-2014

Marking pointer / trailing pointer

- Also as twofold version with a fixed and loose adjustment knob
- with a fixed and loose adjustment knob

Front flange for aluminium-housing

Front flange for stainless steel housing

Triangle front ring

Back flange

Special scale

- multicolour
- Customer logo
- Up to four scales on one dial (similar to the pressure gauge used in refrigeration)
- Measuring point identification
- Special measuring ranges e. g.: -0,5 ... +0,5 bar
- Converted readings e. g.: kg, t (tons), m

Dimensions

Back flange/strap at rear

Code	NG	G	H	L
MAN-RF 22/26/72/76/24/74/28/78	100 mm st. steel	133	54	6xLK 116
MAN-RF 32/62/34/64	100 mm aluminium	133	44	6xLK 116
MAN-RG 22/26/72/76/24/74/28/78/28K/78K/32/62/34/64	160 mm st. steel	215	56	6xLK 178
MAN-RG 32/62/34/64	160 mm aluminium	215	49	6xLK 178

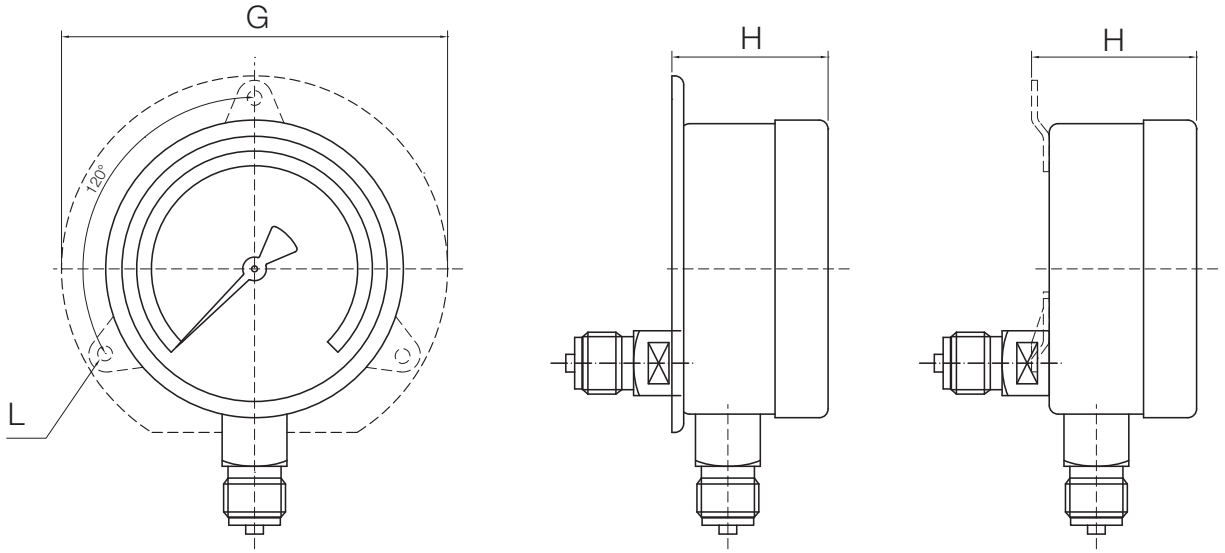

Zertifiziertes QM-System
DIN EN ISO 9001
Zertifikat-Nr. 01017

Digital Manometer with LCD Display

Battery-Operated or 24 V_{DC}

measuring • monitoring • analysing

MAN-SD/-LD

- 4-Digit LCD display
- Measuring ranges: -1 ... +1600 bar
- Accuracy class: 0.5
- Connection:
  G ¼, G ½, ¼" NPT male, ½" NPT male
- Parts in contact with measuring medium:
  stainless steel, ceramics, NBR
- Output: 0 ... 2 V_{DC}, 4 ... 20 mA, relay
- Peak value memory

P1

KOBOLD companies worldwide:
ARGENTINA, AUSTRIA, BELGIUM, BULGARIA, CANADA, CHILE, CHINA, COLOMBIA, CZECHIA, DOMINICAN REPUBLIC, EGYPT, FRANCE, GERMANY, GREAT BRITAIN, HUNGARY, INDIA, INDONESIA, ITALY, MALAYSIA, MEXICO, NETHERLANDS, PERU, POLAND, ROMANIA, SINGAPORE, SOUTH KOREA, SPAIN, SWITZERLAND, TAIWAN, THAILAND, TUNISIA, TURKEY, USA, VIETNAM

KOBOLD Messring GmbH
Nordring 22-24
D-65719 Hofheim/Ts.
Head Office:
+49(0)6192 299-0
+49(0)6192 23398
info.de@kobold.com
www.kobold.com

Digital Manometer with LCD Display Model MAN-SD/-LD

Description

The intelligent KOBOLD digital manometers are used for the display, monitoring and remote transmission of pressure-dependent operating sequences in machines and installations.The pressure to be measured is sensed by a piezo-resistive sensor and displayed by the electronics. As an option, an analogue output signal for remote transmission of the measured values and a relay output are available. The values are shown on a four-digit LCD display. The front cover along with the display can be rotated.
In the pressure switch design with integrated relay, the switching point and hysteresis can be set on the membrane keypad. The starting and end points of the optional analogue output, relative to the display, are freely scalable. A wide range of process connections is available as an option. The process connection can be rotated in axial direction as desired, after loosening the counter nut.

Fields of application

- Plant construction
- Mechanical engineering
- Environmental technology
- Hydraulics

Technical Details

Display:	4-digit LCD, digit height 12.7 mm
Measuring ranges:	-1...0...+1600 bar (special ranges on request)
Accuracy class:	0.5
Temperature coefficient:	
Zero point:	≤ ±0.2% of full scale/10 K
Range:	≤ ±0.1% of full scale/10 K
Zero point correction:	≤ ±25%
Overload range:	3 x P_N (to 40 bar) 2 x P_N (60 ... 160 bar) 1.5 x P_N (250/400/1000/1600 bar) 1.3 x P_N (600 bar)
Conversion rate:	5 per second (standard) (1 to 10 per second can be set ex works)
Housing:	Ø 74 mm, PA6 GK30, Polyester film

Technical Details (continued)

Wetted parts

Sensor:	ceramic (Al_2O_3) (range ≤600 bar) stainless steel (range >600 bar)
Seal:	NBR (range ≤600 bar)
Process connection:	G ¼, G ½, ¼" NPT, ½" NPT male (range ≥1000 bar only G ½ or ½" NPT) stainless steel 1.4571 (other connections on request)
Temperature of the medium:	-30 ... +85 °C
Ambient temperature:	0 ... +60 °C
Storage temperature:	-30 ... +80 °C
Allowed relative humidity:	<90 %, non-condensing
Protection class:	IP 65
Electric connection:	M12x1 round connector or PVC cable
Cable length::	0.5 m (standard), max. 3 m
Weight:	approx. 350 g

MAN-SD

Power supply: 9 V_{DC} (block battery, IEC 6 LR 01

Service life (based on a conversion rate of 5/s):

Operation	Alkaline battery (Duracell® MN1601, Varta® 4922)	Lithium battery (Ultralife® U9VL-J)
continuous operation	2000 h	5200 h
switched-off	7300 h	17300 h

Automatic switch-off times:	4…64 min (auto-off) can only be set ex works; 0 = inaktiv inactive (recommended for analogue or switching output)
Peak value memory:	MIN or MAX values, reset via keypad

MAN-LD

Power supply: 24 V_{DC} ±20%

Options

Limit value relay:	NO contact, bistable, any setting possible, settable hysteresis
Max. switching power:	30 $V_{AC/DC}$, 2 A (for relay output)
Analogue output:	MAN-SD: 0 ... 2 V_{DC} (Load: ≥ 100 kΩ) MAN-LD: 4 ... 20 mA (Load: <500 Ω, galvanically not separated)

1/04-2014

Order Details (Example: **MAN-SD1S 5 AD 0**)

Version	Power supply	Model	Mechanic connection*	Measuring range*	Electric connection
Standard	9 V battery	**MAN-SD1S...**	**5** = G ¼ male **6** = G ½ male **R** = ¼" NPT male **S** = ½" NPT male	**AD =** -1...0 bar **A1 =** -1...+1.5 bar **A2 =** -1...+3 bar **A3 =** -1...+5 bar **A4 =** -1...+9 bar **A5 =** -1...+15 bar **B1 =** 0...+0.6 bar **B2 =** 0...+1 bar **B3 =** 0...+1.6 bar **B4 =** 0...+2.5 bar **B5 =** 0...+4 bar **B6 =** 0...+6 bar **B7 =** 0...+10 bar **B8 =** 0...+16 bar **B9 =** 0...+25 bar **B0 =** 0...+40 bar **C1 =** 0...+60 bar **C2 =** 0...+100 bar **C3 =** 0...+160 bar **C4 =** 0...+250 bar **C5 =** 0...+400 bar **C6 =** 0...+600 bar **D7 =** 0...+1000 bar **D8 =** 0...+1600 bar	**0** = none
Relay output	9 V battery	**MAN-SD2S..**			**S =** connector M12x1 **K =** 0.5 m cable
Output 0-2 V	9 V battery	**MAN-SD3S...**			
Standard	24 V_{DC}	**MAN-LD1S...**			**S =** connector M12x1
Relay output	24 V_{DC}	**MAN-LD2S...**			
Output 4 ... 20 mA	24 V_{DC}	**MAN-LD3S...**			

* Please specify other connections (7/8 UNF for refrigeration technology, M16, etc.) and special measuring ranges in plain text.
Measuring ranges starting at 1000 bar are primarily to be connected to the process with G ½, ½" NPT or M16 female.

Order Details (continued)

Automatic switch-off times	Other options (please specify in plain text)
without = continuous operation (standard except MAN-SD1) **B** = 4 minutes **C** = 8 minutes (standard MAN-SD1) **D** = 16 minutes **E** = 32 minutes **F** = 64 minutes	Display in mbar, PSI, hPa etc. Conversion rate 1-10 pro Sec.

Accessories for round connector M12x1

Electrical connection	Other options (please specify in plain text)
M12-box, Screw terminals, 5-pole	**ZUB-KAB-12D500**
M12-box, 2 m cable, 4-pole	**ZUB-KAB-12K002**
M12-box, 5 m cable, 4-pole	**ZUB-KAB-12K005**
M12-box, Quick-on, 4-pole	**ZUB-KAB-12Q000**

Dimensions

MAN-SD

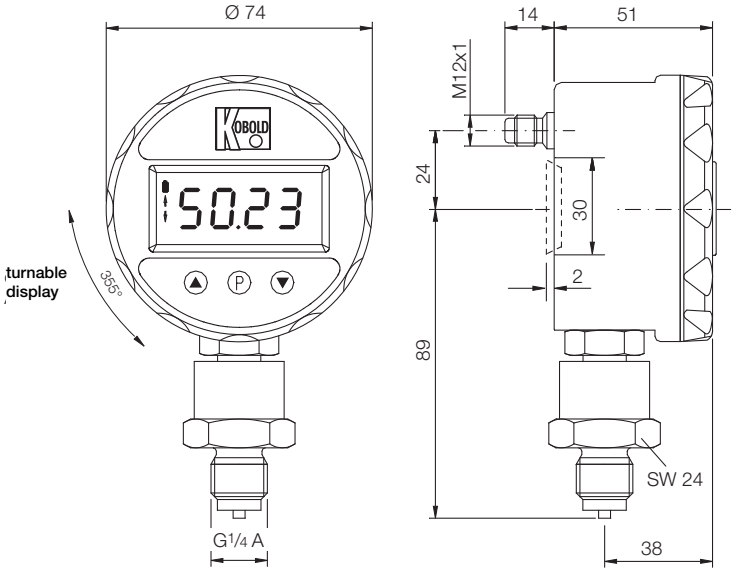

MAN-LD

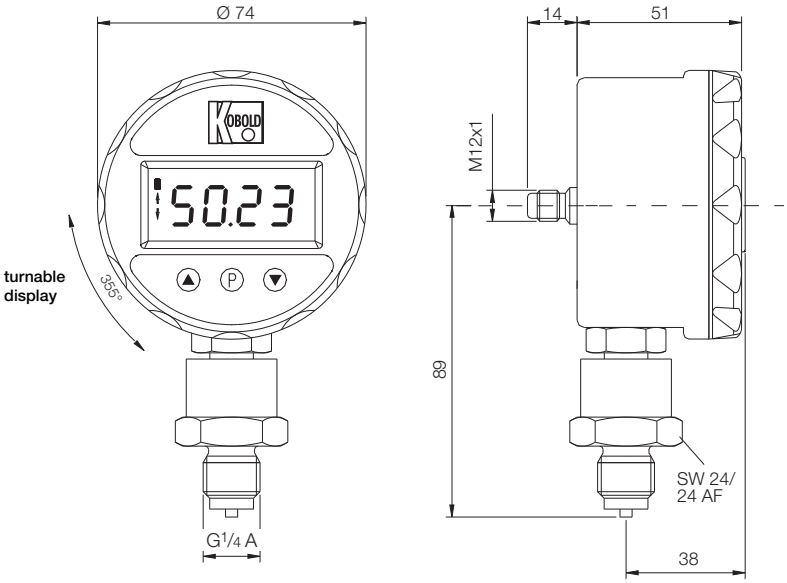

Electric connection: M12 connector assignment

Contact No.	MAN-SD2...	MAN-SD3...	MAN-LD1...	MAN-LD2...	MAN-LD3...
1	-	-	$+V_S/24\,V_{DC}$	$+V_S/24\,V_{DC}$	$+V_S/24\,V_{DC}$
2	NO contact	-	-	NO contact	-
3	-	GND	GND	GND	GND
4	-	Analogue output 0...2 V_{DC}	-	-	Analogue output 4...20 mA
5	NO contact	-	-	NO contact	-

M-Zert
Zertifiziertes QM-System
DIN EN ISO 9001
Zertifikat-Nr. 01017

Digital Pressure Gauge for Gauge, Absolute and Differential Pressure

KOBOLD

measuring • monitoring • analysing

MAN-SF/-BF

- Measuring range: -1...1600 bar
- Accuracy class: 0.5
- Material: Stainless steel and ceramic
- Analogue outputs:
  0/4 - 20 mA, 0 -10 V
- Interface RS 232
- Option: Version with up to
  4 potential free alarm contacts
- Adjustment locking by password
- High overrange protection

KOBOLD companies worldwide:
ARGENTINA, AUSTRIA, BELGIUM, BULGARIA, CANADA, CHILE, CHINA, COLOMBIA, CZECHIA, DOMINICAN REPUBLIC, EGYPT, FRANCE, GERMANY, GREAT BRITAIN, HUNGARY, INDIA, INDONESIA, ITALY, MALAYSIA, MEXICO, NETHERLANDS, PERU, POLAND, ROMANIA, SINGAPORE, SOUTH KOREA, SPAIN, SWITZERLAND, TAIWAN, THAILAND, TUNISIA, TURKEY, USA, VIETNAM

KOBOLD Messring GmbH
Nordring 22-24
D-65719 Hofheim/Ts.
Head Office:
+49(0)6192 299-0
+49(0)6192 23398
info.de@kobold.com
www.kobold.com

Digital Pressure Gauges for Gauge, Absolute and Differential Pressure Model MAN-SF/-BF

Description

The intelligent KOBOLD digital pressure gauges are intended for indicating, monitoring and remote transmission of pressure-dependant processes in machines and production plants. Indication occurs by means of an easily visible 4-digit green LED-display of 14 mm. The version with relays can carry up to 4 alarm contacts to be set with the keypad. (backlit LCD-display). Other interfaces are available as options.

Measuring principle

The pressure is detected by a piezo-resistive sensor and transformed by the electronics into an analogue signal which is proportional to the pressure. Parallel to the indication is also an analogue output for remote transmission of the values measured.

Application

- Food and beverage industries (with diaphragm mounting)
- Engineering
- Machine and apparatus construction
- Pneumatics, hydraulics
- Filter monitoring

Technical Data

Measuring range:	-1...0 bar bis 0...1600 bar (0...2000 bar on request)
Accuracy class:	0.5
Linearity incl. hysteresis:	≤ ±0.5% v. Ew.
Repeatability:	≤ ±0.1% v. Ew.
Temperature • Medium: • Ambient: • Coefficient (offset): • Coefficient (span):	 - 20...+ 85 °C - 20...+ 60 °C ≤ 0.3% / 10 K, v. Ew. ≤ 0.3% / 10 K, v. Ew.
Response time:	0.3 s (adjustable from 0.1 s)
Nominal size:	100 mm
Overload limit:	2 times
Housing:	Stainless steel 1.4301
Process connection:	G ½ male, bottom stainless steel 1.4571 (> 400 bar sensing cell st. st.1.4542) other on request (G ¼, ½" NPT, ¼" NPT)
Front plate:	Polyester foil on AL carrier
Relay (option):	Changeover
Adjustable parameter:	Limit value, hysteresis, Delay (0, 10...99,99 s)
Switch capacity:	250 V_{AC}, 3 A, 50 VA 220 V_{DC}, 3 A, 60 W
Output signal:	4-20 mA, 0-20 mA oder 0-10 V
Max. load:	≤ 500 Ω (mA-output) ≥ 500 Ω (V_{DC} -output)
Protection:	IP 65
Electrical connection:	Terminal box (Phoenix model Mini-Kombicon 3.81 or 5.08 mm)
Supply:	18-30 V_{DC}

Optionen

Frontflush diaphragm
Interface RS 232
Peak memory
Absolute pressure
Differential pressure
Scalable display
Scalable output
Mounting of diaphragm seals
5 times overpressure proof
Longer sensor cable

1/08-2013

Order Details (Example: **MAN-SF26 AD A4 K**)

Typ					
MAN-SF26...	**MAN-SF20...**	**MAN-SF28V...**	**MAN-BF26...**	**MAN-BF20...**	**MAN-BF28V...**
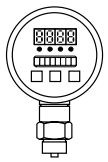	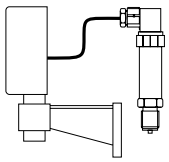	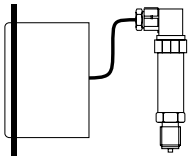	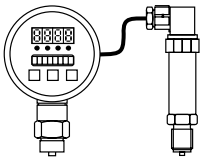	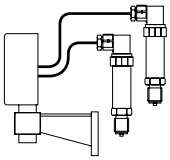	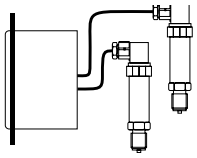
Standard version	with external sensor and wall mount bracket	with external sensor, panel mount	differential pressure sensor with external sensor	differential pressure sensor with 2 external sensors wall mount bracket	differential pressure sensor with 2 external sensors

Order Details (continuation)

Indicating range* others on request	**Analogue output**	**Contact output**	**Options** please specify in writing
AD = -1...0 bar **A1** = -1...+1.5 bar **A2** = -1...+3 bar **A3** = -1...+5 bar **A4** = -1...+9 bar **A5** = -1...+15 bar **B1** = 0...0.6 bar **B2** = 0...1 bar **B3** = 0...1.6 bar **B4** = 0...2.5 bar **B5** = 0...4 bar **B6** = 0...6 bar **B7** = 0...10 bar **B8** = 0...16 bar **B9** = 0...25 bar **B0** = 0...40 bar **C1** = 0...60 bar **C2** = 0...100 bar **C3** = 0...160 bar **C4** = 0...250 bar **C5** = 0...400 bar **C6** = 0...600 bar **D7** = 0...1000 bar **D8** = 0...1600 bar	**...A4...** = 4-20 mA **...A0...** = 0-20 mA **...AV...** = 0-10 V	**...K...** = no limit contacts **...G...** = 2 limit contacts **...M...** = 4 limit contacts	**none** = without option **...F** = front flush diaphragm G½ (standard version) front flush diaphragm G 1 (with external sensor from to 1.6 bar) front flush diaphragm G 1 (with external sensor from 1.6 bar) **...R** = interface RS 232 **...S** = peak memory **...A** = absolute pressure (max. 25 bar) **...U** = 5 times overpressure proof (MAN-SF) **...L** = longer sensor cable **...B** = scalable display **...O** = scalable output **...D** = diaphragm seal mounting

* For MAN-BF... the indicating range is equal to the differential pressure measuring range.
The statistic pressure for MAN-BF... must always be specified in writing.

Accessories

Power supply for the top hat rail mounting

Model: MZB-NSF 030

Input: 230 V_{AC}

Output: 24 V_{DC} / 500 mA, short-circuit proof

Screw terminals

Dimensions (mm)

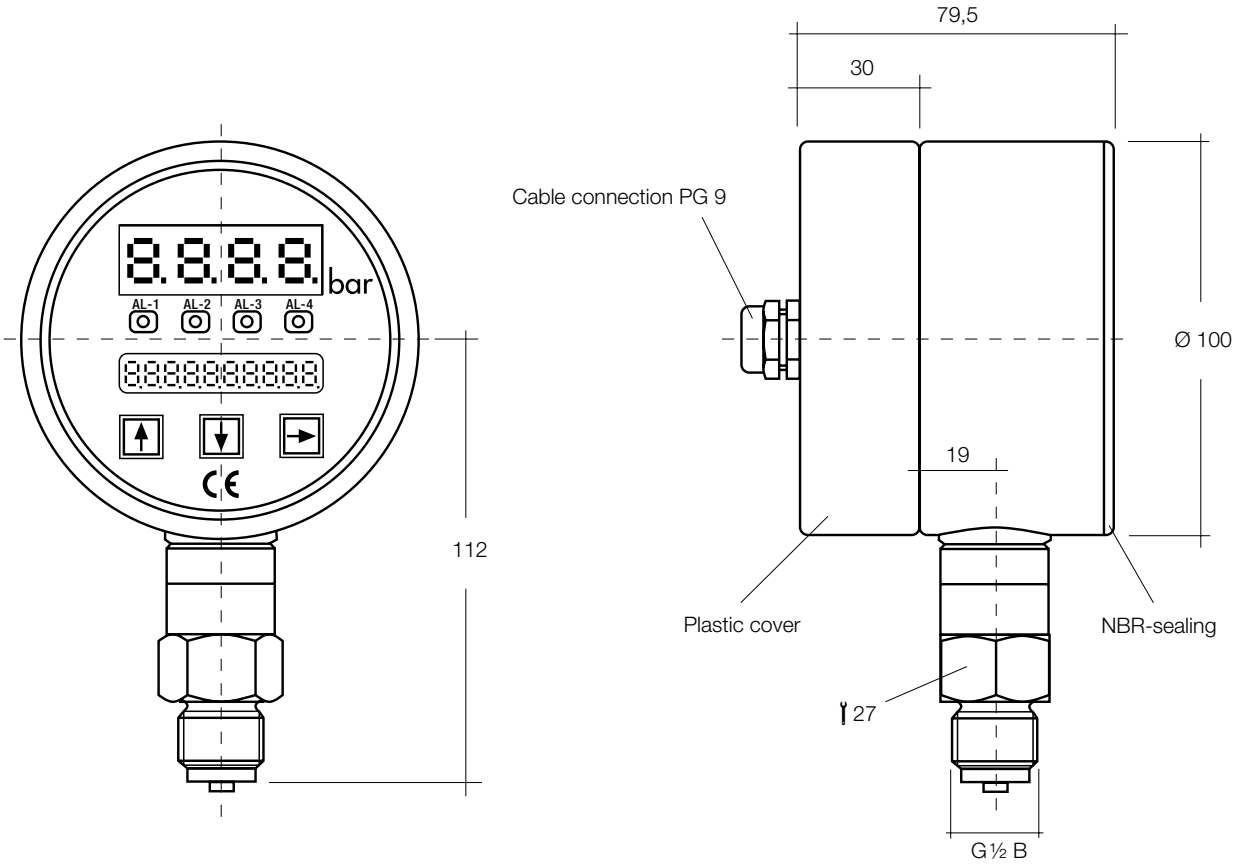

1/08-2013

M-Zert
Zertifiziertes QM-System
DIN EN ISO 9001
Zertifikat-Nr. 01017

Digital Manometer Battery-Operated

KOBOLD

measuring • monitoring • analysing

PDC

- Measuring ranges: 2 bar ... 700 bar
- Measuring accuracy: 0,5% of full scale
- p_{max}: 1000 bar; t_{max}: 100 °C
- Process connection: G ¼ male, ¼" NPT male
- LCD and bar graph display incl. drag indicator function
- Tare function
- Password protection
- MIN/MAX memory

P1

KOBOLD companies worldwide:
ARGENTINA, AUSTRIA, BELGIUM, BULGARIA, CANADA, CHILE, CHINA, COLOMBIA, CZECHIA, DOMINICAN REPUBLIC, EGYPT, FRANCE, GERMANY, GREAT BRITAIN, HUNGARY, INDIA, INDONESIA, ITALY, MALAYSIA, MEXICO, NETHERLANDS, PERU, POLAND, ROMANIA, SINGAPORE, SOUTH KOREA, SPAIN, SWITZERLAND, TAIWAN, THAILAND, TUNISIA, TURKEY, USA, VIETNAM

KOBOLD Messring GmbH
Nordring 22-24
D-65719 Hofheim/Ts.
Head Office:
+49(0)6192 299-0
+49(0)6192 23398
info.de@kobold.com
www.kobold.com

Digital Manometer Battery-Operated Model PDC

Description

The KOBOLD digital manometer PDC is the ideal solution for a local, mains-independent digital display. The integrated battery makes the measurement independent of a stationary power supply. Accuracy, reliability and mechanical stability under stress make the digital manometer suitable for pressure measuring tasks in many applications.

The graduated measuring ranges go from 2 bar to the highpressure range of 700 bar. The housing and wetted parts are made of stainless steel at pressure ranges >50 bar and thus resistant to chemically aggressive substances.

The bar graph display with drag indicator function additionally integrated in the display directly shows the tendency of the current working pressure. The extended version PDC-2 includes an additional 4 1/2-digit display for direct display of the functions MIN/MAX memory, tare function and other parameters independently of the main display. The background lighting of the extended version provides an optimum illumination of the display even in poor light conditions.

The programmable parameters are set using the front keys. The digital manometer meets the requirements of electromagnetic compatibility (EMC) according to EN 61326.

Fields of application and areas of use

- Mechanical engineering
- Plant construction, apparatus engineering
- Hydraulics, pneumatics
- Measuring equipment monitoring

Technical Details

Display:	7-segment LCD bar graph display 9999 digits, 11 mm high (PDC-1) 2x19999 digits, 11/7 mm (PDC-2) lighted (only PDC-2)
Accuracy:	0.5 % of full scale ±1 digit
Stability by year:	≤±0.2 % of full scale under reference conditions
Temperature compensated range:	0....60 °C

Effect of temperature

• Zero point:	≤±0.15%/10 K
• Full measuring scale:	≤±0.15%/10 K
Conversion rate:	5 s-1
Memory:	MIN/MAX (non–volatile, even during change of battery)

Programmable parameters

• Measuring unit:	bar, PSI MPa selectable
• Tare (PDC-2 only):	≤±20 % of full scale, settable
• Automatic switch-off time:	PDC-1: none, option factory set: 15, 30, 60, 120 min PDC-2: settable

Temperature ranges

• Storage:	-20...70 °C
• Sustance to me measured:	-30...85 °C -30...100 °C (at measuring ranges ≥100 bar)
• Ambient:	-10...60 °C
• allowed rel. humidity:	<90 %, non-condensing
Overload limit:	2 times, max. 1000 bar for measuring range C6 (600 bar) and CA (700 bar)
Housing:	stainless steel Option: black protective cap

Wetted parts

Measuring ranges ≤50 bar:	stainless steel, AL_2O_3, NBR (ceramic measuring cell)
Measuring ranges ≥100 bar:	stainless steel only (measuring cell for thin-film technology)
Pressure connection:	G¼ B, ¼" NPT, stainless steel rotates by 300° (PDC-2 only)
Power supply:	2x1,5 V Mignon cell AA
Runtime:	4000 h (AA 2000 mAh)
Protection class:	IP 65
Weight:	approx. 0,4 kg

1/05-2014

Order Details (Example: **PDC-102R2 P02 A**)

Display	Switch-off time	Tare function	Connection		Measuing range	Options
			G ¼	¼" NPT		
1-line	fixed	no	**PDC-102R2..**	**PDC-102N2..**	..**BF**.. = 0 - 2 bar rel. ..**BH**.. = 0 - 5 bar rel. ..**B7**.. = 0 - 10 bar rel. ..**BL**.. = 0 - 20 bar rel. ..**BN**.. = 0 - 50 bar rel. ..**C2**.. = 0 - 100 bar rel. ..**C3**.. = 0 - 160 bar rel. ..**C4**.. = 0 - 250 bar rel. ..**C5**.. = 0 - 400 bar rel. ..**C6**.. = 0 - 600 bar rel. ..**CA**.. = 0 - 700 bar rel.	..**A** = Standard ..**D** = Valve ..**G** = Protective cap housing ..**Z** = Switch-off time set*
2-line, lighted	settable	yes	**PDC-202R2..**	**PDC-202N2..**		

* Please specify when placing an order, only PDC-1, in case of PDC-2 settable via Menu

Dimensions

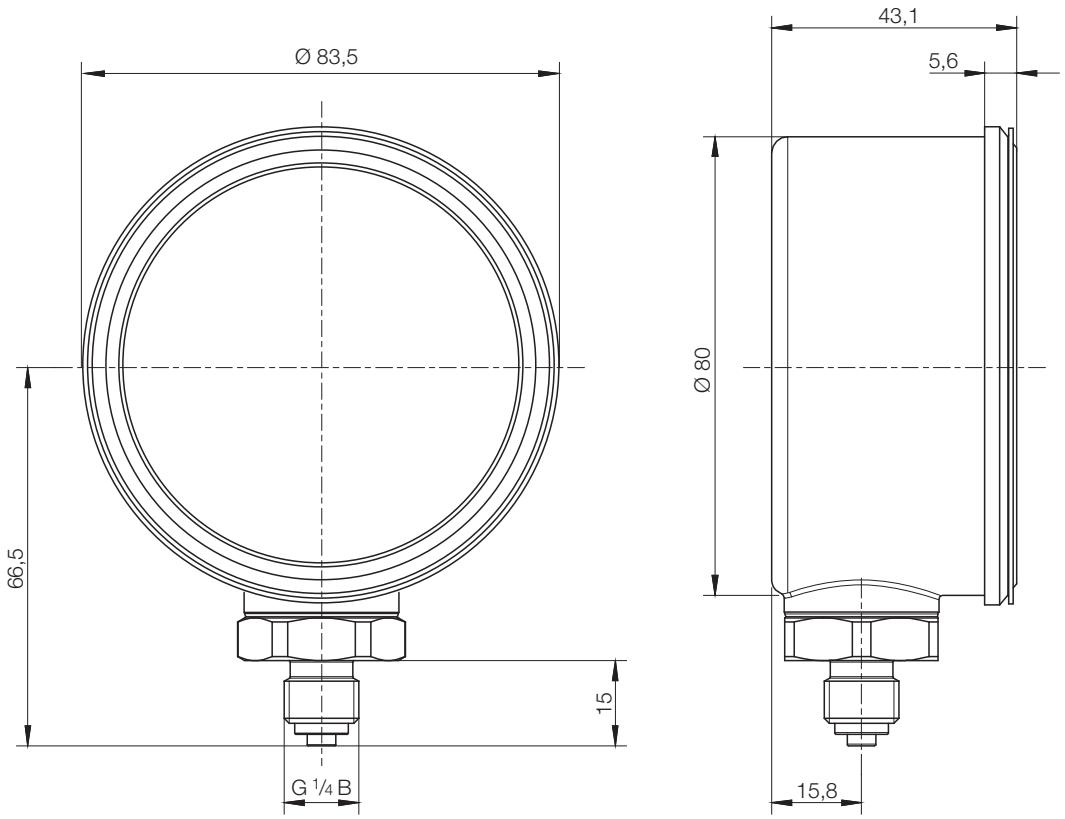

M-Zert
Zertifiziertes QM-System
DIN EN ISO 9001
Zertifikat-Nr. 01017

U-pipe Pressure Gauges

KOBOLD

measuring • monitoring • analysing

PUM

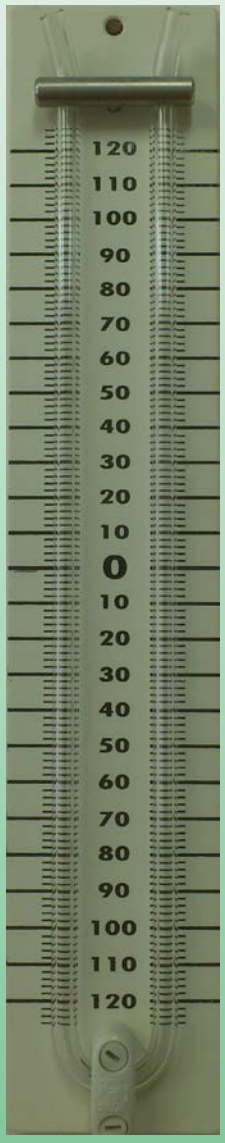

- Nominal measuring range:
  0 ... 1500 water column in mm
  (0 - 150 mbar)
- Scale graduation: ±2 mm
- Read accuracy:
  ±2 water column in mm
  (±0,2 mbar)
- Connection dimension:
  Ø 7 hose coupling
- Material:
  glass tube on aluminium plate

P1

KOBOLD Messring GmbH
Nordring 22-24
D-65719 Hofheim/Ts.
Head Office:
+49(0)6192 299-0
+49(0)6192 23398
info.de@kobold.com
www.kobold.com

U-pipe Pressure Gauges Model PUM

Description

The Kobold U-pipe pressure gauge model PUM is excellent for manometry in low pressure ranges (0 - 150 mbar). The construction of the device is the classical U-shaped glass tube, which is fixed on an aluminium retainer plate. The retainer plate bears a 2 mm graduated scale as well, which ensures the direct reading of the water column in mm when the tube is filled up with water. Connection to the device is through the Ø7 mm hose couplings at the two ends of the glass tube. The pressure difference at the two ends of the glass tube makes the liquid column in the tube move to either direction. The difference of the two ends of the liquid column can be read from the scale with 2 mm accuracy. The scale is formed in a way that the liquid column is not necessary to be at „0" when the device is in no-pressure state. When reading, the distance between the top and bottom liquid levels is indicated by two figures, which are to be added to receive the value referring to the total pressure.

The manometer is available in 6 standard lengths (with 250, 500, 750, 1000, 1250 and 1500 water column in mm nominal measuring range), but we offer custom-made products as well.

Technical Data

Nominal measuring range:	0 - 1500 water column in mm (0 - 150 mbar)
Scale graduation:	± 2 mm
Read accuracy:	± 2 water column in mm (± 0.2 mbar)
Connection dimension:	Ø 7 hose coupling
Installation dimensions:	
Height:	Nominal measuring range +70 mm
Width:	60 mm
Depth	30 mm
Distance between the measuring tube's branches:	30 mm
Weight:	approx. 1.1 - 2.2 kg (depending on length)

Material

Measuring tube:	borosilicate glass tube
Frame:	aluminium alloy
Holding elements:	polystyrene

Dimensions [mm]

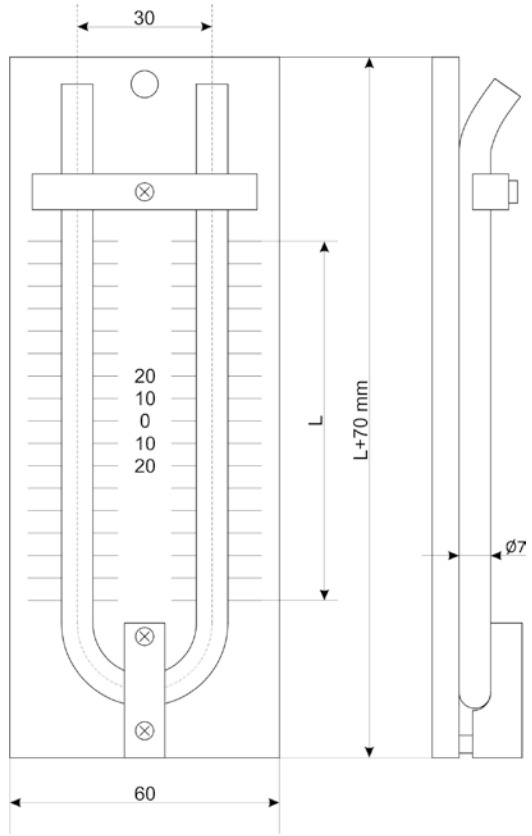

Order details (Example: PUM-025)

Model	L
PUM-025	250
PUM-050	500
PUM-075	750
PUM-100	1000
PUM-125	1250
PUM-150	1500

1/11-2014

Measuring ranges

E5	-10...0 mbar	**F7**	0...10 mbar	**AB**	-0,4...0 bar	**B1**	0...0,6 bar	**B0**	0...40 bar
E6	-16...0 mbar	**F8**	0...16 mbar	**AC**	-0,6...0 bar	**B2**	0...1 bar	**BN**	0...50 bar
E7	-25...0 mbar	**F9**	0...25 mbar	**AD**	-1...0 bar	**B3**	0...1,6 bar	**C1**	0...60 bar
E8	-40...0 mbar	**F0**	0...40 mbar	**A0**	-1...+0,6 bar	**BF**	0...2 bar	**C2**	0...100 bar
E9	-60...0 mbar	**F1**	0...60 mbar	**A1**	-1...+1,5 bar	**B4**	0...2,5 bar	**C3**	0...160 bar
E0	-100...0 mbar	**F2**	0...100 mbar	**A2**	-1...+3 bar	**B5**	0...4 bar	**C4**	0...250 bar
E1	-160...0 mbar	**F3**	0...160 mbar	**A3**	-1...+5 bar	**BH**	0...5 bar	**C5**	0...400 bar
E2	-250...0 mbar	**F4**	0...250 mbar	**A4**	-1...+9 bar	**B6**	0...6 bar	**C6**	0...600 bar
E3	-400...0 mbar	**F5**	0...400 mbar	**AT**	-1...+12,5 bar	**B7**	0...10 bar	**CA**	0...700 bar
E4	-600...0 mbar	**F6**	0...600 mbar	**A5**	-1...+15 bar	**B8**	0...16 bar	**D7**	0...1000 bar
				A6	-1...+24 bar	**BL**	0...20 bar	**D8**	0...1600 bar
				AU	-1...+40 bar	**B9**	0...25 bar		

Pressure gauges

Code		device analog digital	pressure individual	pressure differential	NG	Class	max. temp	ranges E5 BA	E6 B1	E7 B2	E8 B3	E9 B4	E0 B5	E1 B6	E2 B7	E3 B8	E4 B9	F7 B0	F8 C1	F9 C2	F0 C3	F1 C4	F2 C5	F3 C6	F4 D7	F5 D8	F6 D9	materials element brass	element 1.4301	element 1.4571	connection brass	connection 1.4301	connection 1.4571	contacts	filling	connection G"¼	G"½	G"1	UNF	NPT"¼	NPT"½	flange	over-load	resp. time	output 0...20 mA	4...20 mA	0-10 V	0-2 V	note
										AB	AC	AD	A0	A1	A2	A3	A4	AT	A5	A6	AU		BF	BH	BL	BN	CA																						
MAN-SF		D	x		Ø100	0,25	85°C					x		x	x	x	x		x											x			x	4	-	o	x			o	o		2,0	0,1-0,3 s	o	x	o		18-30V$_{DC}$ RS-232
									x	x	x	x	x	x	x	x	x	x	x	x	x	x	x	x	x	x																						
MAN-BF		D		x	Ø100	0,25	85°C					x		x	x	x	x		x											x			x	4	-	o	x			o	o		2,0	0,1-0,3 s	o	x	o		
									x	x	x	x	x	x	x	x	x	x	x	x	x	x	x	x	x	x																						
MAN-SD		D	x		Ø75	0,25	85°C					x		x	x	x	x		x											x			x	1	-	x	x			x	x		3,0	0,1-0,2 s				x	9V battery
									x	x	x	x	x	x	x	x	x	x	x	x	x	x	x	x	x	x																						
MAN-LD		D	x		Ø75	0,25	85°C					x		x	x	x	x		x											x			x	1	-	x	x			x	x		3,0	0,1-0,2 s		x			24 V$_{DC}$ ±20%
									x	x	x	x	x	x	x	x	x	x	x	x	x	x	x	x	x	x																						
PDC		D	x		Ø80	0,25	100°C																x	x	x	x	x			x			x	-	-	x				x			2,0	0,2 s					2x1,5 V AA
															x					x	x	x	x	x																									
MAN-DF		A	x	x	Ø100	1,6	100°C																					x	x			x	x	-	o	x	x						1,3						
									x	x	x	x	x	x	x	x	x	x	x	x	x	x																										
MAN-DG		A	x	x	Ø160	1,6	100°C																					x	x			x	x	-	o	x	x						1,3						
									x	x	x	x	x	x	x	x	x	x	x	x	x	x																										
MAN-DG..R		A		x	Ø160	1,6	100°C																					x				x		3	o		x						1,3						
										x	x	x	x	x	x	x	x	x	x																														
MAN-FG		A	x		Ø160	0,6 0,25	200°C				x	x	x	x	x	x	x		x									x		x	x		x	2	-		x						1,3						
									x	x	x	x	x	x	x	x	x	x	x	x	x	x	x	x	x	x																						
MAN-FI		A	x		Ø250	0,6	100°C				x	x	x	x	x	x	x		x									x		x	x		x	-	-		x						1,3						
									x	x	x	x	x	x	x	x	x	x	x	x	x	x	x	x	x	x																						
MAN-KD		A	x		Ø63	1,6	80°C		x	x	x	x	x	x	x	x	x	x	x	x	x	x	x	x	x	x	x	x						-	-	x							10,0						
MAN-KE		A	x		Ø80	1,6	80°C	x	x	x	x	x	x	x	x	x	x	x	x	x	x	x	x	x	x	x	x	x						-	-		x						1,3						
MAN-KF		A	x		Ø100	1,6	80°C	x	x	x	x	x	x	x	x	x	x	x	x	x	x	x	x	x	x	x	x	x						-	-		x						10,0						
MAN-KG		A	x		Ø160	1,6	80°C				x	x	x	x	x	x	x				x	x	x	x	x	x	x	x						-	-		x						10,0						
MAN-ND		A	x		Ø63	1,6	65°C					x	x	x	x	x	x		x	x														-	o	x	x	x		x	x		1,3						
									x	x	x	x	x	x	x	x	x	x	x	x	x	x	x	x	x	x																						
MAN-NF		A	x		Ø100	1,0	65°C					x	x	x	x	x	x		x	x														-	o	x	x	x		x	x		1,3						
									x	x	x	x	x	x	x	x	x	x	x	x	x	x	x	x	x	x																						
MAN-NH		A	x		Ø150	1,0	65°C					x	x	x	x	x	x		x	x														-	o	x	x	x		x	x		1,3						
									x	x	x	x	x	x	x	x	x	x	x	x	x	x	x	x	x	x																						

Pressure gauges

Code		device analog digital	pressure individual	pressure differential	NG	Class	max. temp	ranges E5 BA	E6 B1	E7 AB B2	E8 AC B3	E9 AD B4	E0 A0 B5	E1 A1 B6	E2 A2 B7	E3 A3 B8	E4 A4 B9	F7 AT B0	F8 A5 C1	F9 A6 C2	F0 AU C3	F1 C4	F2 BF C5	F3 BH C6	F4 BL D7	F5 BN D8	F6 CA D9	materials element brass	element 1.4301	element 1.4571	connection brass	connection 1.4301	connection 1.4571	contacts	filling	connection G"¼	G"½	G"1	UNF	NPT"¼	NPT"½	flange	over-load	resp. time	output 0...20 mA	4...20 mA	0-10 V	0-2 V	note
MAN-PF		A	x		Ø100	1,6	80°C		x	x	x	x	x	x	x				x	x	x	x	x	x	x					x			x	3	o		x						1,3					
										x	x	x	x	x	x	x	x																															
								x	x	x	x	x	x	x	x	x	x	x																															
MAN-PG		A	x		Ø160	1,6	80°C		x	x	x	x	x	x	x				x	x	x	x	x	x	x					x			x	3	o		x						1,3					
										x	x	x	x	x	x	x	x																															
								x	x	x	x	x	x	x	x	x	x	x																															
MAN-QF		A	x		96 X 96	1,6	80°C																																										
										x	x	x	x	x	x	x	x		x									x		x	x			4	-									1,3					
									x	x	x	x	x	x	x	x	x	x	x	x	x	x	x	x																									
MAN-QG		A	x		114 X 114	1,6	80°C																																										
										x	x	x	x	x	x	x	x		x									x		x	x			4	-									1,3					
									x	x	x	x	x	x	x	x	x	x	x	x	x	x	x	x																									
MAN-RD		A	x		Ø63	1,6	80°C																																										
											x	x	x	x	x	x	x		x											x			x	-	o	x								1,2					
										x	x	x	x	x	x	x	x	x	x	x	x	x	x	x																									
MAN-RE		A	x		Ø80	1,0	80°C																																										
										x	x	x	x	x	x	x	x		x												x			-	-	x								1,3					
									x	x	x	x	x	x	x	x	x	x	x	x	x	x	x																									
MAN-RF		A	x		Ø100	1,0	80°C																																										
										x	x	x	x	x	x	x	x		x											x			x	4	o		x					x	1,3					RF...S exponental safety
									x	x	x	x	x	x	x	x	x	x	x	x	x	x	x	x																									
MAN-RG		A	x		Ø160	1,0	80°C																																										
										x	x	x	x	x	x	x	x		x											x			x	4	o		x						1,3					
									x	x	x	x	x	x	x	x	x	x	x	x	x	x	x	x																									
MAN-TD		A	x		Ø63	1,6											x	x	x	x	x																													
																												x		x	x		x	-	o	x			x				1,0						for refrigeration
MAN-TE		A	x		Ø80	1,0											x	x	x	x	x																													
																												x			x			3	o				x				1,0						
MAN-TF		A	x		Ø100	1,0											x	x	x	x	x																													
																												x			x			-	o				x				1,0						
MAN-UF		A		x	Ø100	1,6	150°C																x	x	x	x	x																							
																														x			x	o	o		x			x	x								
										x	x	x	x	x	x	x	x																																	
MAN-UH		A		x	Ø150	1,6	150°C																x	x	x	x	x																							
																														x			x	o	o		x			x	x								
										x	x	x	x	x	x	x	x																																	
MAN-ZF		A	x		Ø100	1,0	60°C					x	x	x	x	x	x	x	x																											x			
																														x			x	o	o		x						1,0					18-30V_{DC}
										x	x	x	x	x	x	x	x	x	x	x	x	x	x	x																									